IN OR 2064/1930
PT OF LOT 2
SUB SEC 49 PB 2/15

GOFORTH JUNE J L/E/
P O BOX 188
CALLAHAN, FL 32011-0188

**2023**

**49-2N-25-4100-0002-0020**

## BUILDING CHARACTERISTICS

| ELEMENT | CD | CONSTRUCTION |
|---|---|---|
| Exterior Wall | 16 | WD FR STUC 100 |
| Roof Structur | 03 | GABLE/HIP 100 |
| Roof Cover | 12 | MODULAR MT 100 |
| Interior Wall | 03 | PLASTER 100 |
| Interior Floo | 14 | CARPET 100 |
| Air Condition | 03 | CENTRAL 100 |
| Heating Type | 04 | AIR DUCTED 100 |
| Bedrooms | | 3 100 |
| Bathrooms | | 2 100 |
| Frame | 02 | WOOD FRAME 100 |
| Stories | 1. | 1. 100 |
| Units | | 0 100 |
| BUD8 Adjustme | 01 | DIST CA 100 |
| Occupancy | 00 | NONE 100 |
| Quality | 03 | Quality Level 03 |

DOR CODE 0100 SINGLE FAMILY
MAP NUM | MKT AREA 07
NEIGHBORHOOD/LOC 7001.00

| AREA TYPE | TOTAL GROSS AREA | PCT OF BASE | TOT ADJ AREA | SUBAREA MARKET VALUE |
|---|---|---|---|---|
| BAS | 1,580 | 100 | 1,580 | 113,230 |
| BAS | 432 | 100 | 432 | 30,959 |
| FOP | 24 | 30 | 7 | 502 |
| FOP | 35 | 30 | 10 | 717 |
| UGR | 576 | 45 | 259 | 18,561 |
| TOTALS | 2,647 | | 2,288 | 163,967 |

## MARKET ADJUSTMENTS

| TYPE | MDL | EFF. AREA | TOT ADJ PTS | EFF. BASE RATE | REPL. COST NEW | AYB | EYB | ECON | FNCT | | NORM | % COND |
|---|---|---|---|---|---|---|---|---|---|---|---|---|
| 0100 | 01 | 2,288 | 108.7800 | 98.17 | 224,613 | 1949 | 1970 | 0 | 0 | 0 | 27.00 | 73.00 |

1 SINGLE FAM – 100% - 0 Heated Area: 2012 HX Base Yr

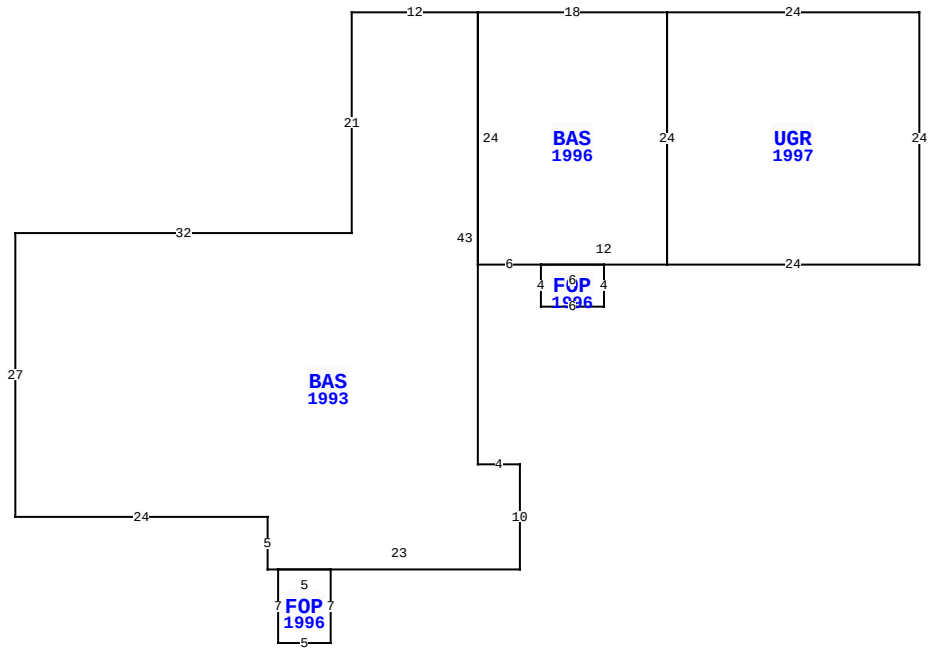


45446 FIFTH AVE, CALLAHAN

| | | | |
|---|---|---|---|
| BLD DATE | | LGL DATE | |
| XF DATE | | LAND DATE | 06/02/2023 MLU |
| INC DATE | | AG DATE | |

## EXTRA FEATURES

| LN | OB/XF CODE | DESCRIPTION | BLD | CAP | L | W | UNITS | UT | Adj R | ADJ UNIT PRICE | ORIG COND | YEAR ON | YEAR ACTUAL | Q | % COND | OB/XF MKT VALUE | NOTES |
|---|---|---|---|---|---|---|---|---|---|---|---|---|---|---|---|---|---|
| 2 | 0940 | SHEDS/PORT | 0 | 100 | 9 | 16 | 144.00 | SF | 19.50 | 19.50 | 100 | 1996 | 1996 | 3 | 20 | 562 | |
| 5 | 0810 | CONCRETE A | 0 | 100 | 0 | 0 | 1,346.00 | SF | 6.50 | 6.50 | 100 | 1996 | 1996 | 3 | 73 | 6,387 | |
| 6 | 0500 | FP-PRE FAB | 0 | 100 | 0 | 0 | 1.00 | UT | 3,500.00 | 3,500.00 | 100 | 1980 | 1980 | 3 | 49 | 1,715 | |
| 7 | 1242 | WD DECK A | 0 | 100 | 0 | 0 | 48.00 | SF | 10.00 | 10.00 | 100 | 2005 | 2005 | 3 | 27 | 130 | |

## NASSAU COUNTY PROPERTY

PAGE 1 of 1

### VALUATION SUMMARY

| | | |
|---|---|---|
| VALUATION BY | | STANDARD |
| Tax Group: 1 | Tax Dist: | |
| BUILDING MARKET VALUE | | 163,967 |
| TOTAL MARKET OB/XF VALUE | | 8,794 |
| TOTAL LAND VALUE - MARKET | | 75,000 |
| TOTAL MARKET VALUE | | 247,761 |
| SOH/AGL Deduction | | 150,937 |
| ASSESSED VALUE | | 96,824 |
| TOTAL EXEMPTION VALUE | HX HB WX | 55,000 |
| BASE TAXABLE VALUE | | 41,824 |
| TOTAL JUST VALUE | | 247,761 |
| NCON VALUE | | 0 |
| INCOME VALUE | | |
| PREVIOUS YEAR MKT VALUE | | 201,836 |

| PERMIT NUM | DESCRIPTION | AMT | ISSUED |
|---|---|---|---|
| R4167 | REPAIR/RRF | 0 | 01/01/2018 |
| 2018 | REPAIR/RRF | 700 | 10/14/1996 |
| 2016 | GARAGE | 24,000 | 09/30/1996 |

## SALES DATA

| OFF RECORD Number | DATE | TYPE INST | Q U | V I | RSN CD | SALE PRICE |
|---|---|---|---|---|---|---|
| 2064/1930 | 8/09/2016 | QC | U | I | 11 | 100 |
| GRANTOR: GOFORTH JUNE J | | | | | | |
| GRANTEE: HUTSON JULIE ET AL | | | | | | |
| 0122/0537 | 1/01/1973 | TA | U | I | | 10,000 |
| GRANTOR: | | | | | | |
| GRANTEE: | | | | | | |

## BUILDING NOTES

## BUILDING DIMENSIONS

UGR=[YR=1997] W24 BAS=[YR=1996] W18 BAS=[YR=1993] W12 S21 W32 S27 E24 S5 E1 FOP=[YR=1996] S7 E5 N7 W5$ E23 N10 W4 N43$ S24 E6 FOP=[YR=1996] S4 E6 N4 W6$ E12 N24$ S24 E24 N24 $.

## LAND DESCRIPTION

TOTAL OB/XF 8,794

| LN | USE CODE | CLS | LAND USE DESCRIPTION | CAP | RD | LOC ZONE | FRONT | DEPTH | TOT LND UTS | UNIT TYPE | DT | DPTH FACT | % COND | TOT ADJ | UNIT PRICE | ADJ UNIT PRICE | LAND VALUE | OTHER ADJUSTMENTS AND NOTES | YEAR | DENSITY | DECL | FRZ | YR | CONSRV |
|---|---|---|---|---|---|---|---|---|---|---|---|---|---|---|---|---|---|---|---|---|---|---|---|---|
| 1 | 000100 | C | SFR | 100 | 0006 | | 150.00 | 122.00 | 150.00 | FF | | 1.00 | 1.00 | 1.00 | 500.00 | 500.00 | 75,000 | | | | | | | |

REVIEW DATE 07/24/2018 BY KBX Total Acres: 0.00 Total Land Value: 75,000 Market: 0 Agricultural: 0 Common: 75,000 PRINTED 08/02/2023 BY SYS