LOTS 3 & 4
LITTLE PINEY ISLAND #2 PB5/261

BUCHANAN LEE ANN D REV TRUST/BUCHANAN LEE ANN D TR
98068 LITTLE PINEY ISLAND PT
FERNANDINA BEACH, FL 32034

2023

47-3N-28-5001-0003-0000

BUILDING CHARACTERISTICS

ELEMENT	CD	CONSTRUCTION
Exterior Wall	17	CB STUCCO 100
Roof Structur	08	IRREGULAR 100
Roof Cover	03	COMP SHNGL 100
Interior Wall	05	DRYWALL 100
Interior Floo	11	CLAY TILE 50
Interior Floo	14	CARPET 50
Air Condition	03	CENTRAL 100
Heating Type	04	AIR DUCTED 100
Bedrooms		3 100
Bathrooms		3 100
Frame	03	MASONRY 100
Stories	2.	2. 100
Units		0 100
Occupancy	00	NONE 100
Quality	05	Quality Level 05

DOR CODE 0100 SINGLE FAMILY
MAP NUM | MKT AREA 04
NEIGHBORHOOD/LOC 4016.00

AREA TYPE	TOTAL GROSS AREA	PCT OF BASE	TOT ADJ AREA	SUBAREA MARKET VALUE
BAS	2,852	100	2,852	331,169
DCK	340	10	34	3,948
FGR	729	55	401	46,563
FOP	24	30	7	813
FSP	334	40	134	15,560
FUS	902	100	902	104,739
TOTALS	5,181		4,330	502,792

MARKET ADJUSTMENTS

TYPE	MDL	EFF. AREA	TOT ADJ PTS	EFF. BASE RATE	REPL. COST NEW	AYB	EYB	ECON	FNCT		NORM	% COND
0900	01	4,330	109.8680	130.47	564,935	1995	2000	0	0	0	11.00	89.00

1 SNGL FAM – 100% - 2004 Heated Area: 3754 HX Base Yr 2004

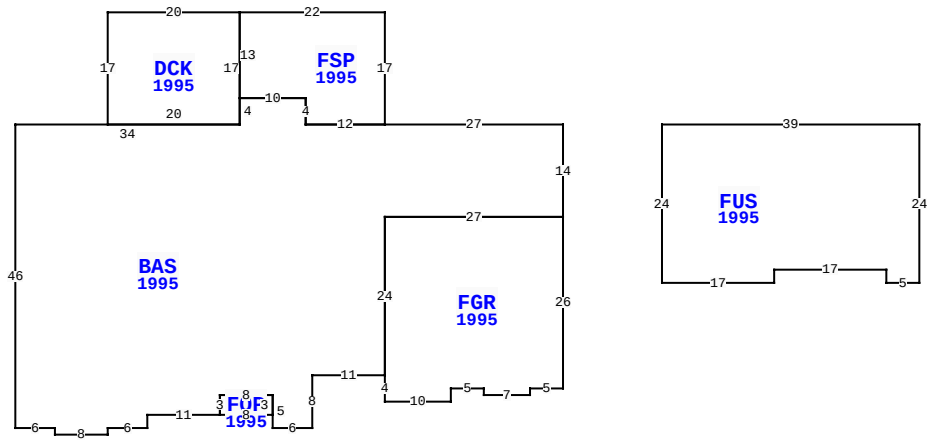

98068 LITTLE PINEY ISLAND PT, FERNANDINA BEACH

BLD DATE		LGL DATE	
XF DATE		LAND DATE	05/24/2023 MLU
INC DATE		AG DATE	

NASSAU COUNTY PROPERTY

PAGE 1 of 1 7

VALUATION SUMMARY

VALUATION BY		STANDARD
Tax Group: 7	Tax Dist:	
BUILDING MARKET VALUE		502,792
TOTAL MARKET OB/XF VALUE		28,147
TOTAL LAND VALUE - MARKET		375,000
TOTAL MARKET VALUE		905,939
SOH/AGL Deduction		380,217
ASSESSED VALUE		525,722
TOTAL EXEMPTION VALUE	HX HB	50,000
BASE TAXABLE VALUE		475,722
TOTAL JUST VALUE		905,939
NCON VALUE		0
INCOME VALUE		
PREVIOUS YEAR MKT VALUE		693,825

PERMIT NUM	DESCRIPTION	AMT	ISSUED
R1705960	REPAIR/RRF	32,500	09/01/2017
1700100	REMODEL	30,000	01/01/2017
940757	NEW CONSTR	3,800	09/01/1994

SALES DATA

OFF RECORD Number	DATE	TYPE INST	Q U	V I	RSN CD	SALE PRICE
2317/1918	11/06/2019	WD	U	I	11	100
GRANTOR: BUCHANAN LEE ANN D						
GRANTEE: BUCHANAN LEE ANN D						
1053/0559	5/01/2002	WD	Q	I		735,000
GRANTOR: ROOKS J WILLIAM & JUD						
GRANTEE: BUCHANAN BRUCE P &						

BUILDING NOTES

BUILDING DIMENSIONS

BAS=[YR=1995] W27 FSP=[YR=1995] N17 W22 DCK=[YR=1995] W20 S17 E20 N17 $ S13 E10 S4 E12 $ W12 N4 W10 S4 W34 S46 E6 S1 E8 N1 E6 N2 E11 FOP=[YR=1995] E8 N3 W8 S3 $ N3 E8 S5 E6 N8 E11 FGR=[YR=1995] S4 E10 N2 E5 S1 E7 N1 E5 N26 W27 S24 $ N24 E27 N14 $ PTR= E15 FUS=[YR=1995] E39 S24 W5 N2 W17 S2 W17 N24 $ W15 $.

EXTRA FEATURES

LN	OB/XF CODE	DESCRIPTION	BLD	CAP	L	W	UNITS	UT	Adj R	ADJ UNIT PRICE	ORIG COND	YEAR ON	YEAR ACTUAL	Q	% COND	OB/XF MKT VALUE	NOTES
1	0500	FP-PRE FAB	0	100	0	0	1.00	UT	3,500.00	3,500.00	100	1995	1995	3	79	2,765	
2	0812	CONCRETE C	0	100	0	0	4,053.00	SF	4.00	4.00	100	1995	1995	3	72	11,673	
4	0300	BOAT DCK W	0	100	0	0	772.00	SF	40.00	40.00	100	1997	1997	3	26	8,029	
6	0322	BOAT LFT L	0	100	0	0	1.00	UT	1,500.00	1,500.00	100	1997	1997	3	20	300	
8	0810	CONCRETE A	0	100	0	0	16.00	SF	5.85	5.85	100	1999	1999	3	79	74	
9	1242	WD DECK A	0	100	10	8	80.00	SF	10.00	10.00	100	1995	1995	3	20	160	
10	1242	WD DECK A	0	100	11	7	77.00	SF	10.00	10.00	100	1995	1995	3	20	154	
11	0920	CWALL-WD/M	0	100	0	0	56.00	LF	390.00	390.00	100	2000	2000	3	20	4,368	
12	0350	CARPORT WD	0	100	20	12	240.00	SF	13.00	13.00	100	1997	1997	3	20	624	

LAND DESCRIPTION

TOTAL OB/XF 28,147

LN	USE CODE	CLS	LAND USE DESCRIPTION	CAP	RD	LOC ZONE	FRONT	DEPTH	TOT LND UTS	UNIT TYPE	DT	DPTH FACT	% COND	TOT ADJ	UNIT PRICE	ADJ UNIT PRICE	LAND VALUE	OTHER ADJUSTMENTS AND NOTES	YEAR	DENSITY	DECL	FRZ	YR	CONSRV
1	000130	C	SFR WATER	100		RS-1	0.00	0.00	2.00	LT		1.00	1.00	0.75	250,000.00	187,500.00	375,000							

REVIEW DATE 07/27/2020 BY KWA Total Acres: 0.00 Total Land Value: 375,000 Market: 0 Agricultural: 0 Common: 375,000 PRINTED 08/02/2023 BY SYS