LOT 47
IN OR 1924/1921
LITTLE PINEY ISLAND PB 5/81

BRAMBLETT ROBERT L & SHARON G
5074 OAK LEAK TERRACE
STONE MOUNTAIN, GA 30087

2023

47-3N-28-5000-0047-0000

NASSAU COUNTY PROPERTY

BUILDING CHARACTERISTICS

ELEMENT	CD	CONSTRUCTION
Exterior Wall	05	AVERAGE 70
Exterior Wall	19	COMMON BRK 30
Roof Structur	08	IRREGULAR 100
Roof Cover	03	COMP SHNGL 100
Interior Wall	05	DRYWALL 100
Interior Floo	12	HARDWOOD 80
Interior Floo	11	CLAY TILE 20
Air Condition	03	CENTRAL 100
Heating Type	04	AIR DUCTED 100
Bedrooms		3 100
Bathrooms		2.5 100
Frame	02	WOOD FRAME 100
Stories	1.	1. 100
Units		0 100
Occupancy	00	NONE 100
Quality	04	Quality Level 04
DOR CODE	0100	SINGLE FAMILY
MAP NUM		MKT AREA 04
NEIGHBORHOOD/LOC	4016.00	

AREA TYPE	TOTAL GROSS AREA	PCT OF BASE	TOT ADJ AREA	SUBAREA MARKET VALUE
BAS	1,648	100	1,648	201,377
FGR	575	55	316	38,613
FOP	209	30	63	7,699
FOP	260	30	78	9,531
TOTALS	2,692		2,105	257,221

MARKET ADJUSTMENTS

TYPE	MDL	EFF. AREA	TOT ADJ PTS	EFF. BASE RATE	REPL. COST NEW	AYB	EYB	ECON	FNCT		NORM	% COND
0900	01	2,105	125.2293	148.71	313,035	1992	1992	0	0	0	17.83	82.17

1 SNGL FAM – 0% - 0 Heated Area: 1648 HX Base Yr

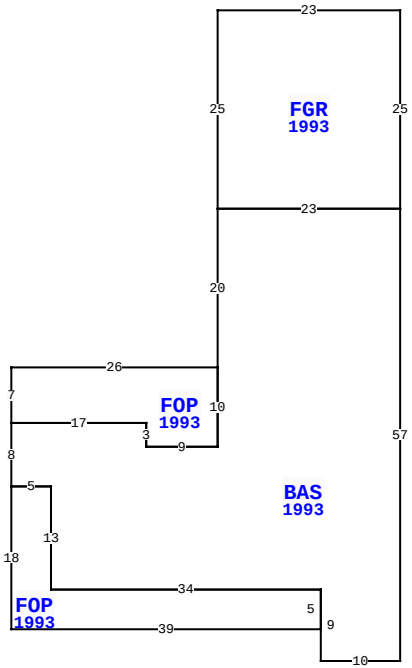

BLD DATE		LGL DATE	
XF DATE		LAND DATE	05/23/2023 MLU
INC DATE		AG DATE	

96302 PINEY ISLAND DR, FERNANDINA BEACH

VALUATION SUMMARY

VALUATION BY	STANDARD
Tax Group: 7	Tax Dist:
BUILDING MARKET VALUE	257,221
TOTAL MARKET OB/XF VALUE	10,383
TOTAL LAND VALUE - MARKET	125,000
TOTAL MARKET VALUE	392,604
SOH/AGL Deduction	74,097
ASSESSED VALUE	318,507
TOTAL EXEMPTION VALUE	0
BASE TAXABLE VALUE	318,507
TOTAL JUST VALUE	392,604
NCON VALUE	0
INCOME VALUE	
PREVIOUS YEAR MKT VALUE	289,552

PERMIT NUM	DESCRIPTION	AMT	ISSUED
7963	NEW CONSTR	92,050	03/26/1992

SALES DATA

OFF RECORD Number	DATE	TYPE INST	Q / U	V / I	RSN CD	SALE PRICE
1924/1921	6/30/2014	WD	Q	I	02	278,000
GRANTOR: CAMPANALE ROSE L TRUS						
GRANTEE: BRAMBLETT ROBERT L						
1628/0506	6/15/2009	WD	U	I	11	100
GRANTOR: CAMPANALE RUDY J & RO						
GRANTEE: CAMPANALE RUDY & RO						

BUILDING NOTES

BUILDING DIMENSIONS

FGR=[YR=1993] W23 S25 BAS=[YR=1993] S20 FOP=[YR=1993] W26 S7 E17 S3 E9 N10$ S10 W9 N3 W17 S8 FOP=[YR=1993] S18 E39 N5 W34 N13 W5$ E5 S13 E34 S9 E10 N57 W23$ E23 N25$.

EXTRA FEATURES

LN	OB/XF CODE	DESCRIPTION	BLD	CAP	L	W	UNITS	UT	Adj R	ADJ UNIT PRICE	ORIG COND	YEAR ON	YEAR ACTUAL	Q	% COND	OB/XF MKT VALUE	NOTES
1	0812	CONCRETE C	0	0	0	0	2,952.00	SF	4.00	4.00	100	1992	1992	3	66	7,793	
2	0500	FP-PRE FAB	0	0	0	0	1.00	UT	3,500.00	3,500.00	100	1992	1992	3	74	2,590	

LAND DESCRIPTION

TOTAL OB/XF 10,383

LN	USE CODE	CLS	LAND USE DESCRIPTION	CAP	RD	LOC ZONE	FRONT	DEPTH	TOT LND UTS	UNIT TYPE	DT	DPTH FACT	% COND	TOT ADJ	UNIT PRICE	ADJ UNIT PRICE	LAND VALUE	OTHER ADJUSTMENTS AND NOTES	YEAR	DENSITY	DECL	FRZ	YR	CONSRV
1	000100	C	SFR	0		RS-1	0.00	0.00	1.00	LT		1.00	1.00	1.00	125,000.00	125,000.00	125,000							

REVIEW DATE 10/25/2018 BY DJX Total Acres: 0.00 Total Land Value: 125,000 Market: 0 Agricultural: 0 Common: 125,000 PRINTED 08/02/2023 BY SYS