LOT 38
IN OR 1967/1606
LITTLE PINEY ISLAND PB 5/81

HOLWELL WALTER BRIAN & KIM T
97049 LITTLE PINEY ISLAND CT
FERNANDINA BEACH, FL 32034

2023

47-3N-28-5000-0038-0000

BUILDING CHARACTERISTICS

ELEMENT	CD	CONSTRUCTION
Exterior Wall	16	WD FR STUC 80
Exterior Wall	20	FACE BRICK 20
Roof Structur	03	GABLE/HIP 100
Roof Cover	03	COMP SHNGL 100
Interior Wall	05	DRYWALL 100
Interior Floo	12	HARDWOOD 90
Interior Floo	14	CARPET 10
Air Condition	03	CENTRAL 100
Heating Type	04	AIR DUCTED 100
Bedrooms		4 100
Bathrooms		3.5 100
Frame	02	WOOD FRAME 100
Stories	2.	2. 100
Units		0 100
Occupancy	00	NONE 100
Quality	06	Quality Level 06
DOR CODE	0100	SINGLE FAMILY
MAP NUM		MKT AREA 04
NEIGHBORHOOD/LOC	4016.00	

AREA TYPE	TOTAL GROSS AREA	PCT OF BASE	TOT ADJ AREA	SUBAREA MARKET VALUE
BAS	2,590	100	2,590	334,543
DCK	76	10	8	1,033
FGR	768	55	422	54,509
FOP	45	30	14	1,808
FOP	60	30	18	2,325
FOP	100	30	30	3,875
FSP	315	40	126	16,275
FUS	1,251	100	1,251	161,588
PTO	21	5	1	129
SFB	768	80	614	79,309
TOTALS	6,042		5,079	656,041

MARKET ADJUSTMENTS

TYPE	MDL	EFF. AREA	TOT ADJ PTS	EFF. BASE RATE	REPL. COST NEW	AYB	EYB	ECON	FNCT		NORM	% COND
0900	01	5,079	120.7212	143.36	728,125	2004	2004	0	0	0	9.90	90.10

1 SNGL FAM – 100% - 2016 Heated Area: 4455 HX Base Yr 2016

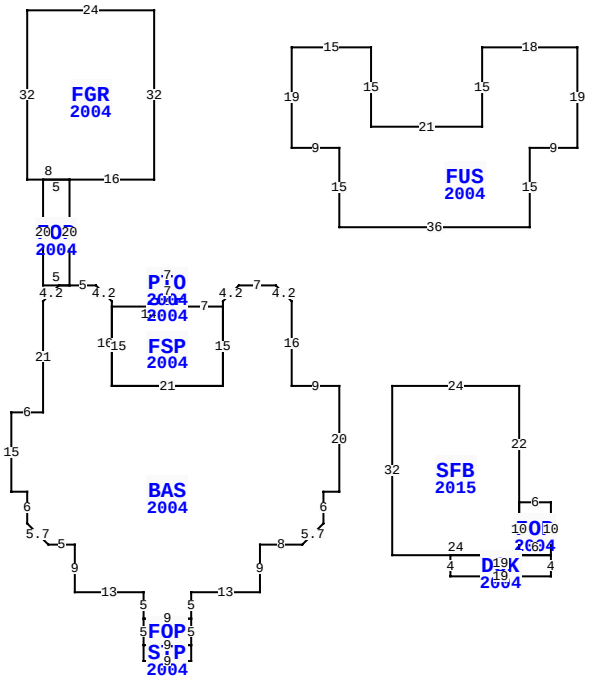

** This building has 12 Sub-Areas

97049 LITTLE PINEY ISLAND CT, FERNANDINA BEACH

BLD DATE		LGL DATE	
XF DATE		LAND DATE	05/23/2023 MLU
INC DATE		AG DATE	

NASSAU COUNTY PROPERTY

PAGE 1 of 1 7

VALUATION SUMMARY

VALUATION BY		STANDARD
Tax Group: 7	Tax Dist:	
BUILDING MARKET VALUE		656,041
TOTAL MARKET OB/XF VALUE		23,615
TOTAL LAND VALUE - MARKET		125,000
TOTAL MARKET VALUE		804,656
SOH/AGL Deduction		292,096
ASSESSED VALUE		512,560
TOTAL EXEMPTION VALUE	HX HB	50,000
BASE TAXABLE VALUE		462,560
TOTAL JUST VALUE		804,656
NCON VALUE		0
INCOME VALUE		
PREVIOUS YEAR MKT VALUE		599,953

PERMIT NUM	DESCRIPTION	AMT	ISSUED
B0311383	GARAGE	30,888	07/01/2003
P0363891	NEW CONSTR	350,000	06/01/2003

SALES DATA

OFF RECORD Number	DATE	TYPE INST	Q U	V I	RSN CD	SALE PRICE
1967/1606	3/12/2015	WD	Q	I	01	553,000
GRANTOR: NORTON THOMAS E & DEB						
GRANTEE: HOLWELL WALTER BRIA						
1083/1863	10/01/2002	WD	Q	V		105,000
GRANTOR: CHISM WAYNE R & LORIE						
GRANTEE: NORTON THOMAS E & D						

BUILDING NOTES

BUILDING DIMENSIONS

BAS=[YR=2004] W9 N16 L3 U3 W7 D3 L3 S1 FSP=[YR=2004] W7 STP=[YR=2004] N3 PTO=[YR=2004] N3 W7 S3 E7 $ W7 S3 E7 $ W14S15 E21 N15 $ S15 W21 N16 L3 U3 W5 FOP=[YR=2004] N20 FGR=[YR=2004] E16 N32 W24 S32 E8 $ W5 S20 E5 $ W2 D3 L3 S21 W6 S15 E3 S6 R4 D4 E5 S9 E13 S5 FOP=[YR=2004] S5 STP=[YR=2004] S3E9 N3 W9 $ E9 N5 W9 $ E9 N5 E13 N9 E8 U4 R4 N6 E3 N20 $ PTR= N30 FUS=[YR=2004] E36 N15 E9 N19 W18 S15 W21 N15 W15S19 E9 S15 $ S30 $ PTR= E10 SFB=[YR=2015] E24 S22 FOP=[YR=2004] E6 S10 DCK=[YR=2004] S4 W19 N4 E19 $ W6 N10 $ S10 W24 N32 $ W10 $.

EXTRA FEATURES

LN	OB/XF CODE	DESCRIPTION	BLD	CAP	L	W	UNITS	UT	Adj R	ADJ UNIT PRICE	ORIG COND	YEAR ON	YEAR ACTUAL	Q	% COND	OB/XF MKT VALUE	NOTES
1	0500	FP-PRE FAB	0	100	0	0	1.00	UT	3,500.00	3,500.00	100	2004	2004	3	89	3,115	
2	0812	CONCRETE C	0	100	0	0	5,485.00	SF	4.00	4.00	100	2004	2004	3	86	18,868	
3	0825	BRICK	0	100	0	0	136.00	SF	12.50	12.50	100	2004	2004	3	96	1,632	

LAND DESCRIPTION

TOTAL OB/XF 23,615

LN	USE CODE	CLS	LAND USE DESCRIPTION	CAP	RD	LOC ZONE	FRONT	DEPTH	TOT LND UTS	UNIT TYPE	DT	DPTH FACT	% COND	TOT ADJ	UNIT PRICE	ADJ UNIT PRICE	LAND VALUE	OTHER ADJUSTMENTS AND NOTES	YEAR	DENSITY	DECL	FRZ	YR	CONSRV
1	000100	C	SFR	100		RS-1	0.00	0.00	1.00	LT		1.00	1.00	1.00	125,000.00	125,000.00	125,000							

REVIEW DATE 01/12/2023 BY DJA Total Acres: 0.00 Total Land Value: 125,000 Market: 0 Agricultural: 0 Common: 125,000 PRINTED 08/02/2023 BY SYS