LOT 30
LITTLE PINEY ISLAND PB 5/81

STALEY LARRY A & KARLA J B
96212 PINEY ISLAND DR
FERNANDINA BEACH, FL 32034

2023

47-3N-28-5000-0030-0000

NASSAU COUNTY PROPERTY

BUILDING CHARACTERISTICS

ELEMENT	CD	CONSTRUCTION
Exterior Wall	31	HARDIE BRD 100
Roof Structur	08	IRREGULAR 100
Roof Cover	03	COMP SHNGL 100
Interior Wall	05	DRYWALL 100
Interior Floo	12	HARDWOOD 70
Interior Floo	14	CARPET 30
Air Condition	03	CENTRAL 100
Heating Type	04	AIR DUCTED 100
Bedrooms		5 100
Bathrooms		4 100
Frame	02	WOOD FRAME 100
Stories	2.	2. 100
Units		0 100
Occupancy	00	NONE 100
Quality	05	Quality Level 05
DOR CODE	0100	SINGLE FAMILY
MAP NUM		MKT AREA 04
NEIGHBORHOOD/LOC	4016.00	

AREA TYPE	TOTAL GROSS AREA	PCT OF BASE	TOT ADJ AREA	SUBAREA MARKET VALUE
BAS	2,478	100	2,478	335,575
FGR	960	55	528	71,503
FOP	420	30	126	17,063
FSP	196	40	78	10,563
FST	24	55	13	1,761
FUS	1,622	100	1,622	219,654
STP	32	10	3	406
STP	64	10	6	813
STR	32	10	3	406
UUS	384	50	192	26,001
TOTALS	6,212		5,049	683,744

MARKET ADJUSTMENTS

TYPE	MDL	EFF. AREA	TOT ADJ PTS	EFF. BASE RATE	REPL. COST NEW	AYB	EYB	ECON	FNCT		NORM	% COND
0900	01	5,049	117.5625	139.61	704,891	2015	2015	0	0	0	3.00	97.00

1 SNGL FAM – 100% - 2022 Heated Area: 4100 HX Base Yr 2022

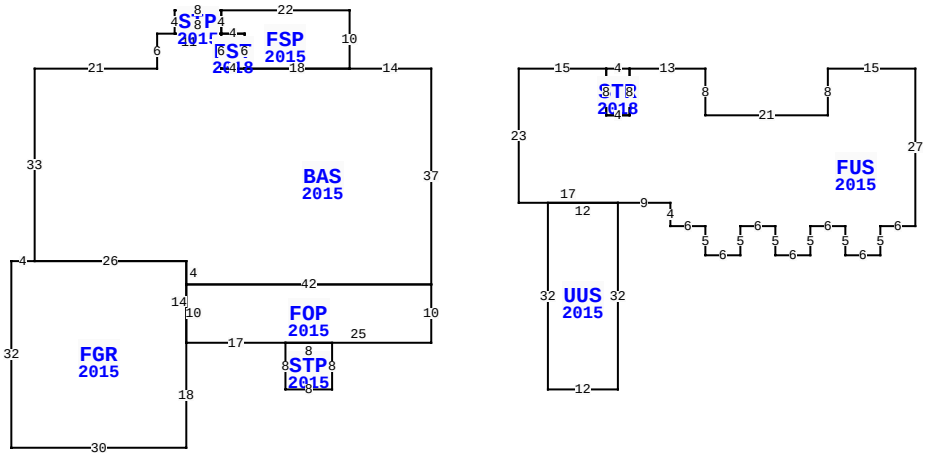

96212 PINEY ISLAND DR, FERNANDINA BEACH

BLD DATE		LGL DATE	
XF DATE		LAND DATE	05/23/2023 MLU
INC DATE		AG DATE	

VALUATION SUMMARY

VALUATION BY		STANDARD
Tax Group: 7	Tax Dist:	
BUILDING MARKET VALUE		683,744
TOTAL MARKET OB/XF VALUE		14,911
TOTAL LAND VALUE - MARKET		125,000
TOTAL MARKET VALUE		823,655
SOH/AGL Deduction		188,285
ASSESSED VALUE		635,370
TOTAL EXEMPTION VALUE	HX HB	50,000
BASE TAXABLE VALUE		585,370
TOTAL JUST VALUE		823,655
NCON VALUE		0
INCOME VALUE		
PREVIOUS YEAR MKT VALUE		616,864

PERMIT NUM	DESCRIPTION	AMT	ISSUED
B1428385	CO ISSUED	0	04/20/2015
B1428385	NEW CONSTR	574,606	02/01/2014

SALES DATA

OFF RECORD Number	DATE	TYPE INST	Q / U	V / I	RSN CD	SALE PRICE
2507/1842	10/22/2021	WD	Q	I	01	865,000
GRANTOR: WEANT MAIR ELIZABETH						
GRANTEE: STALEY LARRY A & KA						
2203/0797	6/11/2018	WD	Q	I	01	672,000
GRANTOR: VINCENT WARREN R & TO						
GRANTEE: WEANT MAIR ELIZABET						

BUILDING NOTES

BUILDING DIMENSIONS

BAS=[YR=2015] W14 FSP=[YR=2015] N10 W22 STP=[YR=2015] W8 S4 E8 N4$ S4 E4 S6 E18$ W18 FST=[YR=2018] N6 W4 S6 E4$ W4 N6 W11 S6 W21 S33 FGR=[YR=2015] W4 S32 E30 N18 FOP=[YR=2015] E17 STP=[YR=2015] S8 E8 N8 W8$ E25 N10 W42 S10$ N14 W26$ E26 S4 E42 N37$ PTR=E15 FUS=[YR=2015] E15 STR=[YR=2018] E4 S8 W4 N8$ S8 E4 N8 E13 S8 E21 N8 E15 S27 W6 S5 W6 N5 W6 S5 W6 N5 W6S5 W6 N5 W6 N4 W9 UUS=[YR=2015] S32W12 N32 E12$ W17 N23$ W15$.

EXTRA FEATURES

LN	OB/XF CODE	DESCRIPTION	BLD	CAP	L	W	UNITS	UT	Adj R	ADJ UNIT PRICE	ORIG COND	YEAR ON	YEAR ACTUAL	Q	% COND	OB/XF MKT VALUE	NOTES
1	0500	FP-PRE FAB	0	100	0	0	1.00	UT	3,500.00	3,500.00	100	2015	2015	3	97	3,395	
2	0812	CONCRETE C	0	100	0	0	1,933.00	SF	4.00	4.00	100	2015	2015	3	96	7,423	
3	0810	CONCRETE A	0	100	0	0	284.00	SF	6.50	6.50	100	2015	2015	3	96	1,772	
4	0810	CONCRETE A	0	100	0	0	372.00	SF	6.50	6.50	100	2015	2015	3	96	2,321	

LAND DESCRIPTION

TOTAL OB/XF 14,911

LN	USE CODE	CLS	LAND USE DESCRIPTION	CAP	RD	LOC ZONE	FRONT	DEPTH	TOT LND UTS	UNIT TYPE	DT	DPTH FACT	% COND	TOT ADJ	UNIT PRICE	ADJ UNIT PRICE	LAND VALUE	OTHER ADJUSTMENTS AND NOTES	YEAR	DENSITY	DECL	FRZ	YR	CONSRV
1	000100	C	SFR	100		RS-1	0.00	0.00	1.00	LT		1.00	1.00	1.00	125,000.00	125,000.00	125,000							

REVIEW DATE 05/16/2022 BY KWA Total Acres: 0.00 Total Land Value: 125,000 Market: 0 Agricultural: 0 Common: 125,000 PRINTED 08/02/2023 BY SYS