IN OR 1256/1607

NECHVATAL CYNTHIA L
45207 IRVIN ROAD
CALLAHAN, FL 32011

**2023**

**47-2N-25-0000-0004-0040**

## BUILDING CHARACTERISTICS

| ELEMENT | CD | CONSTRUCTION |
|---|---|---|
| Exterior Wall | 20 | FACE BRICK 100 |
| Roof Structur | 03 | GABLE/HIP 100 |
| Roof Cover | 03 | COMP SHNGL 100 |
| Interior Wall | 05 | DRYWALL 100 |
| Interior Floo | 14 | CARPET 90 |
| Interior Floo | 08 | SHT VINYL 10 |
| Air Condition | 03 | CENTRAL 100 |
| Heating Type | 04 | AIR DUCTED 100 |
| Bedrooms | | 3 100 |
| Bathrooms | | 2 100 |
| Frame | 02 | WOOD FRAME 100 |
| Stories | 1. | 1. 100 |
| Units | | 0 100 |
| Occupancy | 00 | NONE 100 |
| Quality | 02 | Quality Level 02 |
| DOR CODE | 0100 | SINGLE FAMILY |
| MAP NUM | | MKT AREA 08 |
| NEIGHBORHOOD/LOC | 8026.00 | |

| AREA TYPE | TOTAL GROSS AREA | PCT OF BASE | TOT ADJ AREA | SUBAREA MARKET VALUE |
|---|---|---|---|---|
| BAS | 1,947 | 100 | 1,947 | 187,140 |
| FGR | 484 | 55 | 266 | 25,567 |
| FOP | 48 | 30 | 14 | 1,346 |
| PTO | 120 | 5 | 6 | 576 |
| PTO | 140 | 5 | 7 | 673 |
| TOTALS | 2,739 | | 2,240 | 215,302 |

## MARKET ADJUSTMENTS

| TYPE | MDL | EFF. AREA | TOT ADJ PTS | EFF. BASE RATE | REPL. COST NEW | AYB | EYB | ECON | FNCT | | NORM | % COND |
|---|---|---|---|---|---|---|---|---|---|---|---|---|
| 0900 | 01 | 2,240 | 100.5480 | 119.40 | 267,456 | 1991 | 1996 | 0 | 0 | 0 | 19.50 | 80.50 |

1 SNGL FAM – 100% - 0 Heated Area: 1947 HX Base Yr

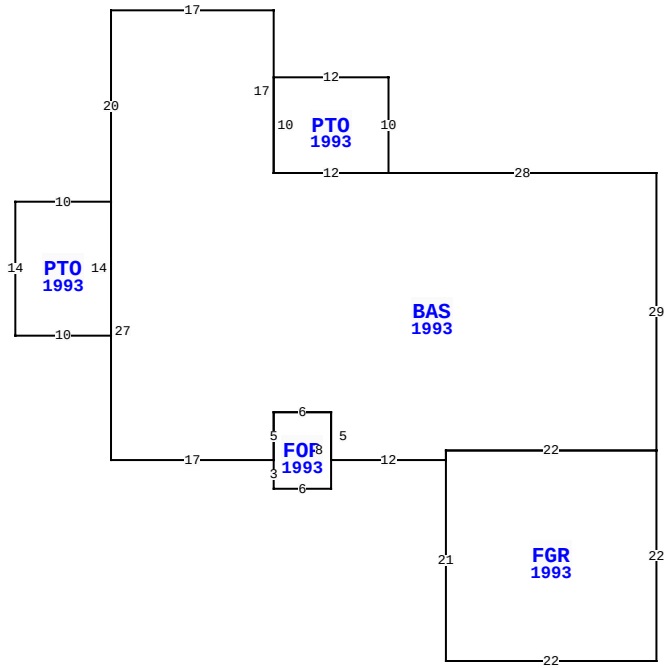


45207 IRVIN RD, CALLAHAN

| | | | |
|---|---|---|---|
| BLD DATE | 03/03/2023 NW | LGL DATE | |
| XF DATE | | LAND DATE | |
| INC DATE | | AG DATE | |

## NASSAU COUNTY PROPERTY

PAGE 1 of 1 6

### VALUATION SUMMARY

| | | |
|---|---|---|
| VALUATION BY | | STANDARD |
| Tax Group: 6 | Tax Dist: | |
| BUILDING MARKET VALUE | | 215,302 |
| TOTAL MARKET OB/XF VALUE | | 17,328 |
| TOTAL LAND VALUE - MARKET | | 98,000 |
| TOTAL MARKET VALUE | | 330,630 |
| SOH/AGL Deduction | | 185,425 |
| ASSESSED VALUE | | 145,205 |
| TOTAL EXEMPTION VALUE | HX HB | 50,000 |
| BASE TAXABLE VALUE | | 95,205 |
| TOTAL JUST VALUE | | 330,630 |
| NCON VALUE | | 0 |
| INCOME VALUE | | |
| PREVIOUS YEAR MKT VALUE | | 271,850 |

| PERMIT NUM | DESCRIPTION | AMT | ISSUED |
|---|---|---|---|
| 20000877 | REPAIR/RRF | 17,500 | 01/30/2020 |
| B1530220 | GARAGE | 23,833 | 04/01/2015 |
| 7345 | NEW CONSTR | 76,137 | 06/24/1991 |

## SALES DATA

| OFF RECORD Number | DATE | TYPE INST | Q / U | V / I | RSN CD | SALE PRICE |
|---|---|---|---|---|---|---|
| 1256/1607 | 9/02/2004 | QC | U | I | 01 | 100 |
| GRANTOR: NECHVATAL STEVEN M & | | | | | | |
| GRANTEE: NECHVATAL CYNTHIA L | | | | | | |
| 0570/1296 | 5/25/1989 | WD | Q | V | | 25,500 |
| GRANTOR: SHADY GROVE DIARY | | | | | | |
| GRANTEE: NECHVATAL STEVEN & | | | | | | |

## BUILDING NOTES

## BUILDING DIMENSIONS

BAS=[YR=1993] W28 PTO=[YR=1993] N10 W12 S10 E12$ W12 N17 W17 S20 PTO=[YR=1993] W10 S14 E10 N14$ S27 E17 FOP=[YR=1993] S3 E6 N8 W6 S5$ N5 E6 S5 E12 FGR=[YR=1993] S21 E22 N22 W22 S1$ N1 E22 N29$.

## EXTRA FEATURES

| LN | OB/XF CODE | DESCRIPTION | BLD | CAP | L | W | UNITS | UT | Adj R | ADJ UNIT PRICE | ORIG COND | YEAR ON | YEAR ACTUAL | Q | % COND | OB/XF MKT VALUE | NOTES |
|---|---|---|---|---|---|---|---|---|---|---|---|---|---|---|---|---|---|
| 1 | 0500 | FP-PRE FAB | 0 | 100 | 0 | 0 | 1.00 | UT | 3,500.00 | 3,500.00 | 100 | 1991 | 1991 | 3 | 72 | 2,520 | |
| 2 | 0810 | CONCRETE A | 0 | 100 | 0 | 0 | 300.00 | SF | 6.50 | 6.50 | 100 | 1991 | 1991 | 3 | 64 | 1,248 | |
| 3 | 0510 | GARAGE WD- | 0 | 100 | 20 | 20 | 400.00 | SF | 35.00 | 35.00 | 100 | 2015 | 2015 | 3 | 81 | 11,340 | |
| 4 | 0351 | CARPORT MT | 0 | 100 | 15 | 20 | 300.00 | SF | 10.00 | 10.00 | 100 | 2015 | 2015 | 3 | 74 | 2,220 | |

## LAND DESCRIPTION

TOTAL OB/XF 17,328

| LN | USE CODE | CLS | LAND USE DESCRIPTION | CAP | RD | LOC ZONE | FRONT | DEPTH | TOT LND UTS | UNIT TYPE | DT | DPTH FACT | % COND | TOT ADJ | UNIT PRICE | ADJ UNIT PRICE | LAND VALUE | OTHER ADJUSTMENTS AND NOTES | YEAR | DENSITY | DECL | FRZ | YR | CONSRV |
|---|---|---|---|---|---|---|---|---|---|---|---|---|---|---|---|---|---|---|---|---|---|---|---|---|
| 1 | 000115 | C | SFR ACRES | 100 | 0005 | OR | 0.00 | 0.00 | 2.80 | AC | | 1.00 | 1.00 | 1.00 | 35,000.00 | 35,000.00 | 98,000 | | | | | | | |

REVIEW DATE 08/12/2020 BY KB Total Acres: 2.80 Total Land Value: 98,000 Market: 0 Agricultural: 0 Common: 98,000 PRINTED 08/02/2023 BY SYS