LOT 71
IN OR 1528/1053
WATERWAY OAKS AT OYSTER BAY

SCHINDLER RICHARD J & ESTHER P
P O BOX 16926
FERNANDINA BEACH, FL 32035

2023

46-3N-28-6205-0071-0000

BUILDING CHARACTERISTICS

ELEMENT	CD	CONSTRUCTION
Exterior Wall	31	HARDIE BRD 100
Roof Structur	03	GABLE/HIP 100
Roof Cover	03	COMP SHNGL 100
Interior Wall	05	DRYWALL 100
Interior Floo	13	LVT/LAMNT 60
Interior Floo	11	CLAY TILE 40
Air Condition	03	CENTRAL 100
Heating Type	04	AIR DUCTED 100
Bedrooms		3 100
Bathrooms		2.5 100
Frame	02	WOOD FRAME 100
Stories	1.5	1.5 100
Units		0 100
Occupancy	00	NONE 100
Quality	05	Quality Level 05
DOR CODE	0100	SINGLE FAMILY
MAP NUM		MKT AREA 04
NEIGHBORHOOD/LOC	4079.00	

AREA TYPE	TOTAL GROSS AREA	PCT OF BASE	TOT ADJ AREA	SUBAREA MARKET VALUE
BAS	2,163	100	2,163	317,841
FGR	468	55	257	37,765
FOP	170	30	51	7,494
FSP	242	40	97	14,254
FSP	144	40	58	8,523
FUS	935	100	935	137,394
PTO	64	5	3	440
SFB	204	80	163	23,952
TOTALS	4,390		3,727	547,662

MARKET ADJUSTMENTS

TYPE	MDL	EFF. AREA	TOT ADJ PTS	EFF. BASE RATE	REPL. COST NEW	AYB	EYB	ECON	FNCT		NORM	% COND
0500	01	3,727	110.2860	157.16	585,735	2006	2008	0	0	0	6.50	93.50

1 SFR CUST – 100% - 2009 Heated Area: 3261 HX Base Yr 2009

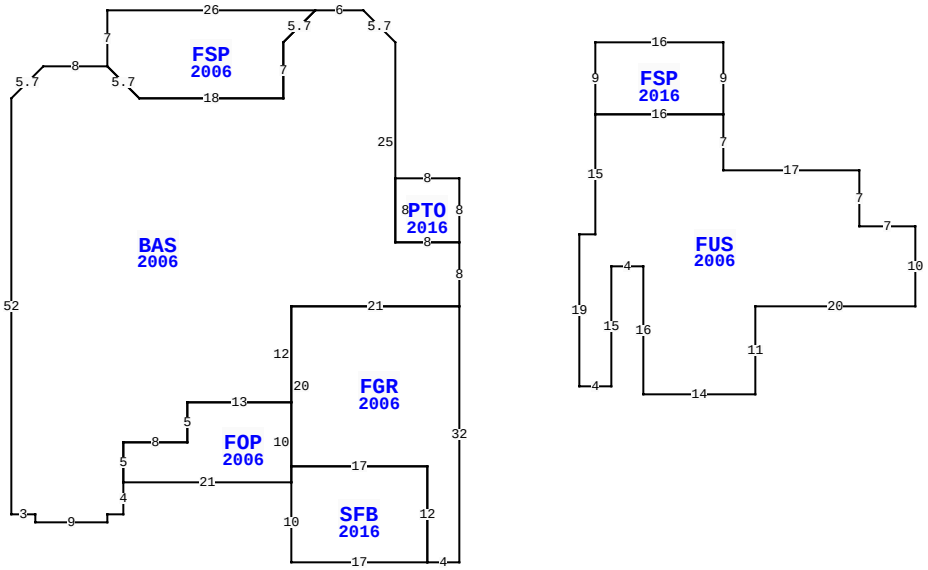

96026 PARK PL, FERNANDINA BEACH

BLD DATE	07/26/2007 RK	LGL DATE	06/07/2023 MLU
XF DATE		LAND DATE	
INC DATE		AG DATE	

NASSAU COUNTY PROPERTY

PAGE 1 of 1 4

VALUATION SUMMARY

VALUATION BY		STANDARD
Tax Group: 4	Tax Dist:	
BUILDING MARKET VALUE		547,662
TOTAL MARKET OB/XF VALUE		11,205
TOTAL LAND VALUE - MARKET		135,000
TOTAL MARKET VALUE		693,867
SOH/AGL Deduction		335,083
ASSESSED VALUE		358,784
TOTAL EXEMPTION VALUE	HX HB	50,000
BASE TAXABLE VALUE		308,784
TOTAL JUST VALUE		693,867
NCON VALUE		0
INCOME VALUE		
PREVIOUS YEAR MKT VALUE		567,417

PERMIT NUM	DESCRIPTION	AMT	ISSUED
R2012367	ROOF	8,795	12/10/2020
B1632203	GARAGE	0	04/29/2016
B24707	REMODEL	8,511	05/01/2011
B22522	HURRICANE SHUTTER	10,000	05/01/2009
C15623	CO ISSUED	0	12/01/2005
B0515623	NEW CONSTR	232,000	07/21/2005

SALES DATA

OFF RECORD Number	DATE	TYPE INST	Q / U	V / I	RSN CD	SALE PRICE
1528/1053	10/03/2007	WD	Q	I		440,000
GRANTOR: WATSON CUSTOM HOME BU						
GRANTEE: SCHINDLER RICHARD J						
1323/0646	6/07/2005	WD	U	V	19	130,000
GRANTOR: OB ISLAND HOMES LLC						
GRANTEE: WATSON CUSTOM HOME						

BUILDING NOTES

EXTRA FEATURES

L N	OB/XF CODE	DESCRIPTION	BLD	CAP	L	W	UNITS	UT	Adj R	ADJ UNIT PRICE	ORIG COND	YEAR ON	YEAR ACTUAL	Q	% COND	OB/XF MKT VALUE	NOTES
1	0855	CONC PAVER	0	100	0	0	567.00	SF	7.00	7.00	100	2006	2006	3	88	3,493	
2	0500	FP-PRE FAB	0	100	0	0	1.00	UT	3,500.00	3,500.00	100	2006	2006	3	91	3,185	
3	0812	CONCRETE C	0	100	0	0	1,186.00	SF	4.00	4.00	100	2006	2006	3	88	4,175	
4	1126	CB/STC 8"	0	100	10	0	50.00	SF	8.00	8.00	100	2006	2006	3	88	352	

BUILDING DIMENSIONS

BAS=[YR=2006] U4 L4 W6 FSP=[YR=2006] W26 S7 D4 R4 E18 N7 R4 U4 $ D4 L4 S7 W18 U4 L4 W8 D4 L4 S52 E3 S1 E9 N1 E2 N4 FOP=[YR=2006] E21 SFB=[YR=2016] S10 E17 FGR=[YR=2006] E4 N32 W21 S20 E17 S12$ N12 W17 S2$ N10 W13 S5 W8 S5$ N5 E8 N5 E13 N12 E21 N8 PTO=[YR=2016] N8 W8 S8 E8$ W8 N25$ PTR= E25 FSP=[YR=2016] E16 S9 FUS=[YR=2006] S7 E17 S7 E7 S10 W20 S11 W14 N16 W4 S15 W4 N19 E2 N15 E16 $ W16 N9 $ W25 $.

LAND DESCRIPTION

TOTAL OB/XF 11,205

L N	USE CODE	CLS	LAND USE DESCRIPTION	CAP	R D	LOC ZONE	FRONT	DEPTH	TOT LND UTS	UNIT TYPE	D T	DPTH FACT	% COND	TOT ADJ	UNIT PRICE	ADJ UNIT PRICE	LAND VALUE	OTHER ADJUSTMENTS AND NOTES	YEAR	DENSITY	DECL	FRZ	YR	CONSRV
1	000133	C	SFR LAKE	100		PUD	0.00	0.00	1.00	LT		1.00	1.00	1.00	135,000.00	135,000.00	135,000							

REVIEW DATE 06/14/2018 BY KWX Total Acres: 0.00 Total Land Value: 135,000 Market: 0 Agricultural: 0 Common: 135,000 PRINTED 08/02/2023 BY SYS