LOT 8
WATERS EDGE PB 6/263

THOMPSON TAD & RIANA
96311 SPRINGWOOD LN
FERNANDINA BEACH, FL 32034

2023

46-3N-28-6200-0008-0000

BUILDING CHARACTERISTICS

ELEMENT	CD	CONSTRUCTION
Exterior Wall	31	HARDIE BRD 80
Exterior Wall	20	FACE BRICK 20
Roof Structur	04	WOOD TRUSS 100
Roof Cover	03	COMP SHNGL 100
Interior Wall	05	DRYWALL 100
Interior Floo	13	LVT/LAMNT 90
Interior Floo	11	CLAY TILE 10
Air Condition	03	CENTRAL 100
Heating Type	04	AIR DUCTED 100
Bedrooms		4 100
Bathrooms		3 100
Frame	03	MASONRY 100
Stories	1.	1. 100
Units		0 100
Occupancy	00	NONE 100
Quality	03	Quality Level 03
DOR CODE	0100	SINGLE FAMILY
MAP NUM		MKT AREA 04
NEIGHBORHOOD/LOC	4021.00	

AREA TYPE	TOTAL GROSS AREA	PCT OF BASE	TOT ADJ AREA	SUBAREA MARKET VALUE
BAS	2,559	100	2,559	376,071
FGR	782	55	430	63,193
FOP	170	30	51	7,495
FOP	207	30	62	9,112
FST	44	55	24	3,527
STP	8	10	1	147
STP	36	10	4	588
UOP	378	20	76	11,169
TOTALS	4,184		3,207	471,301

MARKET ADJUSTMENTS

TYPE	MDL	EFF. AREA	TOT ADJ PTS	EFF. BASE RATE	REPL. COST NEW	AYB	EYB	ECON	FNCT		NORM	% COND
0500	01	3,207	103.1320	146.96	471,301	2022	2022	0	0	0	0.00	100.00

1 SFR CUST – 100% - 2023 Heated Area: 2559 HX Base Yr 2023

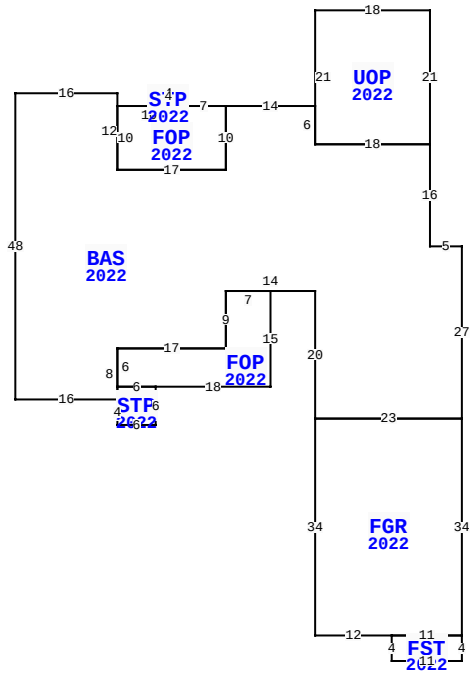

96311 SPRINGWOOD LN, FERNANDINA BEACH

BLD DATE		LGL DATE	
XF DATE		LAND DATE	
INC DATE		AG DATE	

NASSAU COUNTY PROPERTY

PAGE 1 of 1 4

VALUATION SUMMARY

VALUATION BY		STANDARD
Tax Group: 4	Tax Dist:	
BUILDING MARKET VALUE		471,301
TOTAL MARKET OB/XF VALUE		34,740
TOTAL LAND VALUE - MARKET		168,000
TOTAL MARKET VALUE		674,041
SOH/AGL Deduction		122,023
ASSESSED VALUE		552,018
TOTAL EXEMPTION VALUE	HX HB	50,000
BASE TAXABLE VALUE		502,018
TOTAL JUST VALUE		674,041
NCON VALUE		506,041
INCOME VALUE		
PREVIOUS YEAR MKT VALUE		168,000

PERMIT NUM	DESCRIPTION	AMT	ISSUED
B2108101	NEW CONSTR	385,669	06/21/2021

SALES DATA

OFF RECORD Number	DATE	TYPE INST	Q / U	V / I	RSN CD	SALE PRICE
2419/0520	12/15/2020	WD	Q	V	01	157,000
GRANTOR: KING GARY S & WANDA I						
GRANTEE: THOMPSON TAD & RIAN						
1722/1904	2/02/2011	WD	U	V	11	100
GRANTOR: WILLIAMSON DAVID & LI						
GRANTEE: KING GARY S & WANDA						

BUILDING NOTES

BUILDING DIMENSIONS

BAS=[YR=2022] W5 N16 UOP=[YR=2022] N21 W18 S21 E18$ W18 N6 W14 FOP=[YR=2022] W7 STP=[YR=2022] N2W4S2E4$ W10 S10 E17 N10$ S10 W17 N12 W16 S48 E16 STP=[YR=2022] S4 E6 N6 FOP=[YR=2022] E18 N15 W7 S9 W17 S6 E6$ W6 S2$ N8 E17 N9 E14 S20 FGR=[YR=2022] S34 E12 FST=[YR=2022] S4 E11 N4 W11$ E11 N34 W23$ E23 N27$.

EXTRA FEATURES

LN	OB/XF CODE	DESCRIPTION	BLD	CAP	L	W	UNITS	UT	Adj R	ADJ UNIT PRICE	ORIG COND	YEAR ON	YEAR ACTUAL	Q	% COND	OB/XF MKT VALUE	NOTES
1	0504	FP-ELECTRI	0	100	0	0	1.00	UT	2,000.00	2,000.00	100	2022	2022	3	100	2,000	
2	0855	CONC PAVER	0	100	0	0	2,474.00	SF	10.00	10.00	100	2022	2022	3	100	24,740	
3	0855	CONC PAVER	0	100	0	0	800.00	SF	10.00	10.00	100	2022	2022	3	100	8,000	

LAND DESCRIPTION

TOTAL OB/XF 34,740

LN	USE CODE	CLS	LAND USE DESCRIPTION	CAP	RD	LOC ZONE	FRONT	DEPTH	TOT LND UTS	UNIT TYPE	DT	DPTH FACT	% COND	TOT ADJ	UNIT PRICE	ADJ UNIT PRICE	LAND VALUE	OTHER ADJUSTMENTS AND NOTES	YEAR	DENSITY	DECL	FRZ	YR	CONSRV
1	000116	C	SFR MARSH	100		RS-1	0.00	0.00	1.00	LT		1.00	1.00	1.05	160,000.00	168,000.00	168,000							

REVIEW DATE 09/14/2022 BY DJ Total Acres: 0.00 Total Land Value: 168,000 Market: 0 Agricultural: 0 Common: 168,000 PRINTED 08/02/2023 BY SYS