LOT 37
SPANISH OAKS UNIT 1-A PB 6/99

FURSE LIVING TRUST/FURSE THOMAS W TRUSTEE
96220 MARSH LAKES DR
FERNANDINA BEACH, FL 32034

2023

46-3N-28-576A-0037-0000

BUILDING CHARACTERISTICS

ELEMENT	CD	CONSTRUCTION
Exterior Wall	31	HARDIE BRD 100
Roof Structur	03	GABLE/HIP 100
Roof Cover	03	COMP SHNGL 100
Interior Wall	05	DRYWALL 100
Interior Floo	14	CARPET 80
Interior Floo	08	SHT VINYL 20
Air Condition	03	CENTRAL 100
Heating Type	04	AIR DUCTED 100
Bedrooms		4 100
Bathrooms		2 100
Frame	02	WOOD FRAME 100
Stories	1.	1. 100
Units		0 100
Occupancy	00	NONE 100
Quality	02	Quality Level 02
DOR CODE	0100	SINGLE FAMILY
MAP NUM		MKT AREA 04
NEIGHBORHOOD/LOC	4021.00	

AREA TYPE	TOTAL GROSS AREA	PCT OF BASE	TOT ADJ AREA	SUBAREA MARKET VALUE
BAS	1,485	100	1,485	166,522
FGR	504	55	277	31,062
FOP	78	30	23	2,579
PTO	80	5	4	448
TOTALS	2,147		1,789	200,610

MARKET ADJUSTMENTS

TYPE	MDL	EFF. AREA	TOT ADJ PTS	EFF. BASE RATE	REPL. COST NEW	AYB	EYB	ECON	FNCT		NORM	% COND
0900	01	1,789	106.4000	126.35	226,040	1999	1999	0	0	0	11.25	88.75

1 SNGL FAM – 0% - 0 Heated Area: 1485 HX Base Yr

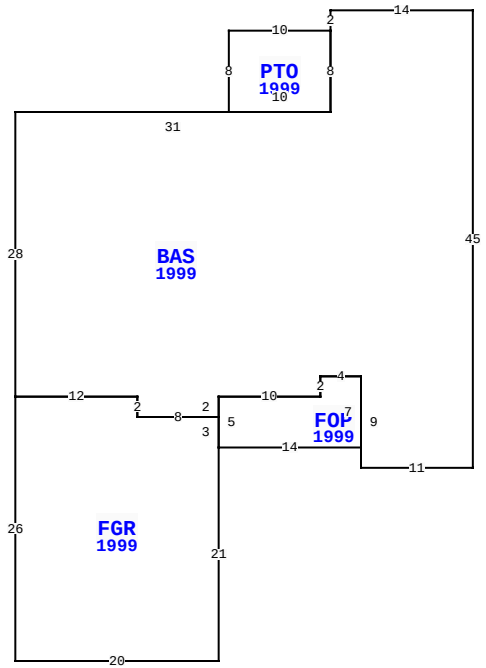

BLD DATE	03/03/2023	NW	LGL DATE
XF DATE			LAND DATE
INC DATE			AG DATE

95120 TWIN OAKS LN, FERNANDINA BEACH

NASSAU COUNTY PROPERTY

PAGE 1 of 1 4

VALUATION SUMMARY

VALUATION BY	STANDARD
Tax Group: 4	Tax Dist:
BUILDING MARKET VALUE	200,610
TOTAL MARKET OB/XF VALUE	7,459
TOTAL LAND VALUE - MARKET	68,000
TOTAL MARKET VALUE	276,069
SOH/AGL Deduction	38,936
ASSESSED VALUE	237,133
TOTAL EXEMPTION VALUE	0
BASE TAXABLE VALUE	237,133
TOTAL JUST VALUE	276,069
NCON VALUE	0
INCOME VALUE	
PREVIOUS YEAR MKT VALUE	246,750

PERMIT NUM	DESCRIPTION	AMT	ISSUED
9962344	CHNGE SRVC	4,400	11/01/1999
9906204	NEW CONSTR	90,606	06/01/1999

SALES DATA

OFF RECORD Number	DATE	TYPE INST	Q / U	V / I	RSN CD	SALE PRICE
2312/0236	11/19/2018	WD	U	I	11	100
GRANTOR: FURSE THOMAS W & CARO						
GRANTEE: FURSE LIVING TRUST						
0908/0568	11/17/1999	WD	Q	I		107,100
GRANTOR: BRAYWICK JOINT VENTUR						
GRANTEE: FURSE THOMAS W & CA						

BUILDING NOTES

BUILDING DIMENSIONS

BAS=[YR=1999] W14 S2 PTO=[YR=1999] W10 S8 E10 N8 $ S8 W31
S28 FGR=[YR=1999] S26 E20 N21 FOP=[YR=1999] E14 N7 W4 S2
W10 S5 $ N3 W8 N2 W12 $ E12 S2 E8 N2 E10 N2 E4 S9 E11 N45 $.

EXTRA FEATURES

LN	OB/XF CODE	DESCRIPTION	BLD	CAP	L	W	UNITS	UT	Adj R	ADJ UNIT PRICE	ORIG COND	YEAR ON	YEAR ACTUAL	Q	% COND	OB/XF MKT VALUE	NOTES
1	0500	FP-PRE FAB	0	0	0	0	1.00	UT	3,500.00	3,500.00	100	1999	1999	3	84	2,940	
2	0810	CONCRETE A	0	0	44	4	176.00	SF	6.50	6.50	100	1999	1999	3	79	904	
3	0810	CONCRETE A	0	0	44	16	704.00	SF	6.50	6.50	100	1999	1999	3	79	3,615	

LAND DESCRIPTION

TOTAL OB/XF 7,459

LN	USE CODE	CLS	LAND USE DESCRIPTION	CAP	RD	LOC ZONE	FRONT	DEPTH	TOT LND UTS	UNIT TYPE	DT	DPTH FACT	% COND	TOT ADJ	UNIT PRICE	ADJ UNIT PRICE	LAND VALUE	OTHER ADJUSTMENTS AND NOTES	YEAR	DENSITY	DECL	FRZ	YR	CONSRV
1	000100	C	SFR	0			0.00	0.00	1.00	LT		1.00	1.00	0.85	80,000.00	68,000.00	68,000							

REVIEW DATE 06/19/2018 BY KWX Total Acres: 0.00 Total Land Value: 68,000 Market: 0 Agricultural: 0 Common: 68,000 PRINTED 08/02/2023 BY SYS