LOT 33
IN OR 2248/864
RIVERSIDE SUB PB 5/231

94116 RIVER MARSH DR LLC
317 MADISONS WAY
WALESKA, GA 30183

2023

46-3N-28-5500-0033-0000

NASSAU COUNTY PROPERTY

BUILDING CHARACTERISTICS

ELEMENT	CD	CONSTRUCTION
Exterior Wall	05	AVERAGE 100
Roof Structur	03	GABLE/HIP 100
Roof Cover	03	COMP SHNGL 100
Interior Wall	05	DRYWALL 100
Interior Floo	13	LVT/LAMNT 60
Interior Floo	11	CLAY TILE 40
Air Condition	03	CENTRAL 100
Heating Type	04	AIR DUCTED 100
Bedrooms		3 100
Bathrooms		2 100
Frame	02	WOOD FRAME 100
Stories	1.	1. 100
Units		0 100
Occupancy	00	NONE 100
Quality	04	Quality Level 04
DOR CODE	0100	SINGLE FAMILY
MAP NUM		MKT AREA 04
NEIGHBORHOOD/LOC	4021.00	

AREA TYPE	TOTAL GROSS AREA	PCT OF BASE	TOT ADJ AREA	SUBAREA MARKET VALUE
BAS	1,914	100	1,914	243,599
FGR	484	55	266	33,854
FOP	132	30	40	5,091
FSP	168	40	67	8,527
PTO	336	5	17	2,164
TOTALS	3,034		2,304	293,235

MARKET ADJUSTMENTS

TYPE	MDL	EFF. AREA	TOT ADJ PTS	EFF. BASE RATE	REPL. COST NEW	AYB	EYB	ECON	FNCT		NORM	% COND
0900	01	2,304	114.6306	136.12	313,620	1994	2008	0	0	0	6.50	93.50

1 SNGL FAM – 0% - 0 Heated Area: 1914 HX Base Yr

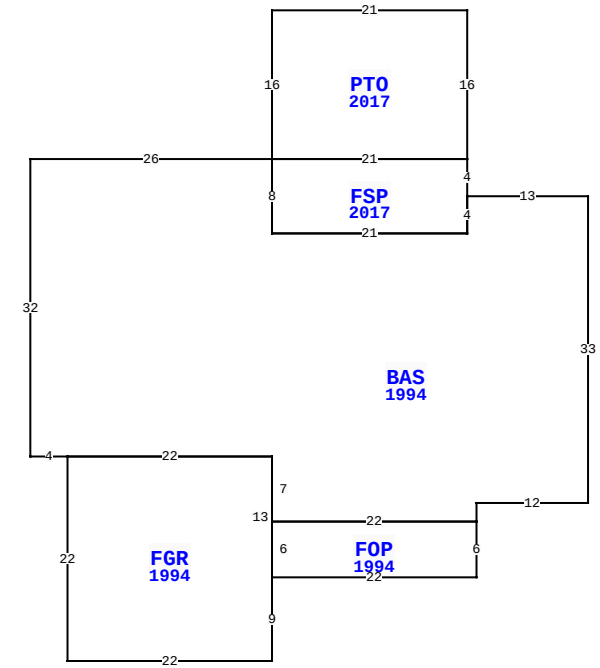

94116 RIVER MARSH DR, FERNANDINA BEACH

BLD DATE		LGL DATE	
XF DATE		LAND DATE	
INC DATE		AG DATE	

VALUATION SUMMARY

VALUATION BY	STANDARD
Tax Group: 4	Tax Dist:
BUILDING MARKET VALUE	293,235
TOTAL MARKET OB/XF VALUE	8,799
TOTAL LAND VALUE - MARKET	80,000
TOTAL MARKET VALUE	382,034
SOH/AGL Deduction	42,616
ASSESSED VALUE	339,418
TOTAL EXEMPTION VALUE	0
BASE TAXABLE VALUE	339,418
TOTAL JUST VALUE	382,034
NCON VALUE	0
INCOME VALUE	
PREVIOUS YEAR MKT VALUE	340,580

PERMIT NUM	DESCRIPTION	AMT	ISSUED
00000814	REMODEL	11,223	05/01/2000
94-01144	NEW CONSTR	129,450	06/01/1994

SALES DATA

OFF RECORD Number	DATE	TYPE INST	Q / U	V / I	RSN CD	SALE PRICE
2248/0864	1/08/2019	WD	U	I	11	100
GRANTOR: BLALOCK ROBERT D & MA						
GRANTEE: 94116 RIVER MARSH D						
2121/0296	5/16/2017	WD	Q	I	02	320,000
GRANTOR: BALLARD SHERRILL						
GRANTEE: BLALOCK ROBERT D &						

BUILDING NOTES

BUILDING DIMENSIONS

BAS=[YR=1994] W13 FSP=[YR=2017] N4 PTO=[YR=2017] N16 W21 S16 E21$ W21 S8 E21 N4$ S4 W21 N8 W26 S32 E4 FGR=[YR=1994] S22 E22 N9 FOP=[YR=1994] E22 N6 W22 S6$ N13 W22$ E22 S7 E22 N2 E12 N33$.

EXTRA FEATURES

LN	OB/XF CODE	DESCRIPTION	BLD	CAP	L	W	UNITS	UT	Adj R	ADJ UNIT PRICE	ORIG COND	YEAR ON	YEAR ACTUAL	Q	% COND	OB/XF MKT VALUE	NOTES
1	0811	CONCRETE B	0	0	0	0	1,410.00	SF	5.20	5.20	100	1994	1994	3	70	5,132	
2	0500	FP-PRE FAB	0	0	0	0	1.00	UT	3,500.00	3,500.00	100	1994	1994	3	77	2,695	
3	0940	SHEDS/PORT	0	0	12	10	120.00	SF	30.00	30.00	100	2005	2005	3	27	972	

LAND DESCRIPTION

TOTAL OB/XF 8,799

LN	USE CODE	CLS	LAND USE DESCRIPTION	CAP	RD	LOC ZONE	FRONT	DEPTH	TOT LND UTS	UNIT TYPE	DT	DPTH FACT	% COND	TOT ADJ	UNIT PRICE	ADJ UNIT PRICE	LAND VALUE	OTHER ADJUSTMENTS AND NOTES	YEAR	DENSITY	DECL	FRZ	YR	CONSRV
1	000100	C	SFR	0		RS-1	0.00	0.00	1.00	LT		1.00	1.00	1.00	80,000.00	80,000.00	80,000							

REVIEW DATE 06/28/2018 BY KW Total Acres: 0.00 Total Land Value: 80,000 Market: 0 Agricultural: 0 Common: 80,000 PRINTED 08/02/2023 BY SYS