LOT 30
IN OR 2049/852
OYSTER BAY #4 PB 6/24

PEDRETTI PAUL L & GRACE P
96120 BAY VIEW DRIVE
FERNANDINA BEACH, FL 32034

2023

46-3N-28-5483-0030-0000

NASSAU COUNTY PROPERTY

BUILDING CHARACTERISTICS

ELEMENT	CD	CONSTRUCTION
Exterior Wall	31	HARDIE BRD 100
Roof Structur	08	IRREGULAR 100
Roof Cover	03	COMP SHNGL 100
Interior Wall	05	DRYWALL 100
Interior Floo	11	CLAY TILE 60
Interior Floo	13	LVT/LAMNT 40
Air Condition	03	CENTRAL 100
Heating Type	04	AIR DUCTED 100
Bedrooms		4 100
Bathrooms		3.5 100
Frame	02	WOOD FRAME 100
Stories	2.	2. 100
Units		0 100
Occupancy	00	NONE 100
Quality	04	Quality Level 04
DOR CODE	0100	SINGLE FAMILY
MAP NUM		MKT AREA 04
NEIGHBORHOOD/LOC	4024.00	

AREA TYPE	TOTAL GROSS AREA	PCT OF BASE	TOT ADJ AREA	SUBAREA MARKET VALUE
BAS	2,237	100	2,237	356,688
DCK	525	10	52	8,291
FGR	660	55	363	57,880
FOP	180	30	54	8,610
FSP	525	40	210	33,485
FST	25	55	14	2,232
FUS	891	100	891	142,069
STR	64	10	6	956
UAT	300	10	30	4,784
UUS	200	50	100	15,945
TOTALS	5,607		3,957	630,941

MARKET ADJUSTMENTS

TYPE	MDL	EFF. AREA	TOT ADJ PTS	EFF. BASE RATE	REPL. COST NEW	AYB	EYB	ECON	FNCT		NORM	% COND
0500	01	3,957	113.0220	161.06	637,314	2019	2019	0	0	0	1.00	99.00

1 SFR CUST – 100% - 2021 Heated Area: 3128 HX Base Yr 2021

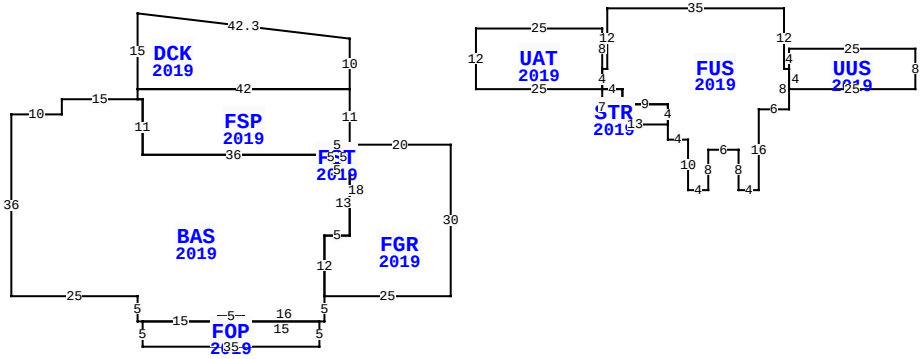

96120 BAY VIEW DR, FERNANDINA BEACH

BLD DATE		LGL DATE	
XF DATE		LAND DATE	06/07/2023 MLU
INC DATE		AG DATE	

VALUATION SUMMARY

VALUATION BY		STANDARD
Tax Group: 4	Tax Dist:	
BUILDING MARKET VALUE		630,941
TOTAL MARKET OB/XF VALUE		21,880
TOTAL LAND VALUE - MARKET		135,000
TOTAL MARKET VALUE		787,821
SOH/AGL Deduction		267,136
ASSESSED VALUE		520,685
TOTAL EXEMPTION VALUE	HX HB	50,000
BASE TAXABLE VALUE		470,685
TOTAL JUST VALUE		787,821
NCON VALUE		0
INCOME VALUE		
PREVIOUS YEAR MKT VALUE		642,554

PERMIT NUM	DESCRIPTION	AMT	ISSUED
C1809093	CO ISSUED	0	09/18/2019
B1809093	NEW CONSTR	429,322	12/01/2018

SALES DATA

OFF RECORD Number	DATE	TYPE INST	Q U	V I	RSN CD	SALE PRICE
2049/0852	5/31/2016	WD	Q	V	01	85,000
GRANTOR: FERRY JOHN V & CARYL						
GRANTEE: PEDRETTI PAUL L & G						
1242/0499	6/30/2004	WD	U	V	05	110,000
GRANTOR: OB ISLAND HOMES LLC						
GRANTEE: FERRY JOHN V & CARY						

BUILDING NOTES

BUILDING DIMENSIONS

DCK=[YR=2019] N10 U5 L42 S15 E42$ FSP=[YR=2019] W42 S2 BAS=[YR=2019] W15 S3 W10 S36 E25 S5 E1 FOP=[YR=2019] S5 E35 N5 W15 N1 W5 S1 W15$ E15 N1 E5 S1 E16 N5 FGR=[YR=2019] E25 N30 W20 S18 W5 S12$ N12 E5 N13 FST=[YR=2019] N5 W5 S5 E5$ W5 N3 W36 N11 W1$ E1 S11 E36 N2 E5 N11$ PTR= E25 UAT=[YR=2019] N12 E25 S8 FUS=[YR=2019] E1 N12 E35 S12 E1 UUS=[YR=2019] N4 E25 S8 W25 N4$ S8 W6 S16 W4 N8 W6 S8 W4 N10 W4 N3 STR=[YR=2019] W13 N7 E4 S3 E9 S4$ N4 W9 N3 W4 N4$ S4 W25$ W25$.

EXTRA FEATURES

LN	OB/XF CODE	DESCRIPTION	BLD	CAP	L	W	UNITS	UT	Adj R	ADJ UNIT PRICE	ORIG COND	YEAR ON	YEAR ACTUAL	Q	% COND	OB/XF MKT VALUE	NOTES
1	0500	FP-PRE FAB	0	100	0	0	1.00	UT	3,500.00	3,500.00	100	2019	2019	3	99	3,465	
2	0855	CONC PAVER	0	100	45	3	135.00	SF	10.00	10.00	100	2019	2019	3	99	1,337	
3	0855	CONC PAVER	0	100	0	0	1,725.00	SF	10.00	10.00	100	2019	2019	3	99	17,078	

LAND DESCRIPTION

TOTAL OB/XF 21,880

LN	USE CODE	CLS	LAND USE DESCRIPTION	CAP	RD	LOC ZONE	FRONT	DEPTH	TOT LND UTS	UNIT TYPE	DT	DPTH FACT	% COND	TOT ADJ	UNIT PRICE	ADJ UNIT PRICE	LAND VALUE	OTHER ADJUSTMENTS AND NOTES	YEAR	DENSITY	DECL	FRZ	YR	CONSRV
1	000133	C	SFR LAKE	100			0.00	0.00	1.00	LT		1.00	1.00	1.00	135,000.00	135,000.00	135,000							

REVIEW DATE 08/15/2019 BY KWX Total Acres: 0.00 Total Land Value: 135,000 Market: 0 Agricultural: 0 Common: 135,000 PRINTED 08/02/2023 BY SYS