LOT C-8
IN OR 2522/134
VILLAS AT OYSTER BAY HARBOURS

KUBISTA KIRK & JANET J
234 CATALINA DR
TYBEE ISLAND, GA 31328

2023

46-3N-28-5481-00C8-0000

NASSAU COUNTY PROPERTY

BUILDING CHARACTERISTICS

ELEMENT	CD	CONSTRUCTION
Exterior Wall	10	ABOVE AVG 60
Exterior Wall	17	CB STUCCO 40
Roof Structur	08	IRREGULAR 100
Roof Cover	13	STAND SEAM 100
Interior Wall	05	DRYWALL 100
Interior Floo	13	LVT/LAMNT 50
Interior Floo	14	CARPET 50
Air Condition	03	CENTRAL 100
Heating Type	04	AIR DUCTED 100
Bedrooms		3 100
Bathrooms		2.5 100
Frame	02	WOOD FRAME 100
Stories	3.	3. 100
Units		0 100
Quality	04	Quality Level 04
DOR CODE	0100	SINGLE FAMILY
MAP NUM		MKT AREA 04
NEIGHBORHOOD/LOC	4024.100	

AREA TYPE	TOTAL GROSS AREA	PCT OF BASE	TOT ADJ AREA	SUBAREA MARKET VALUE
BAS	30	100	30	6,520
BAS	135	100	135	29,340
FGR	809	55	445	96,714
FOP	161	30	48	10,432
FSP	180	40	72	15,648
FUS	60	100	60	13,040
FUS	99	100	99	21,516
FUS	601	100	601	130,618
FUS	1,103	100	1,103	239,720
STR	72	10	7	1,521
TOTALS	4,126		2,737	594,844

MARKET ADJUSTMENTS

TYPE	MDL	EFF. AREA	TOT ADJ PTS	EFF. BASE RATE	REPL. COST NEW	AYB	EYB	ECON	FNCT		NORM	% COND
0500	11	2,737	152.8243	217.77	596,036	2021	2021	0	0	0	0.20	99.80

1 SFR CUST – 0% - 0 Heated Area: 2028 HX Base Yr

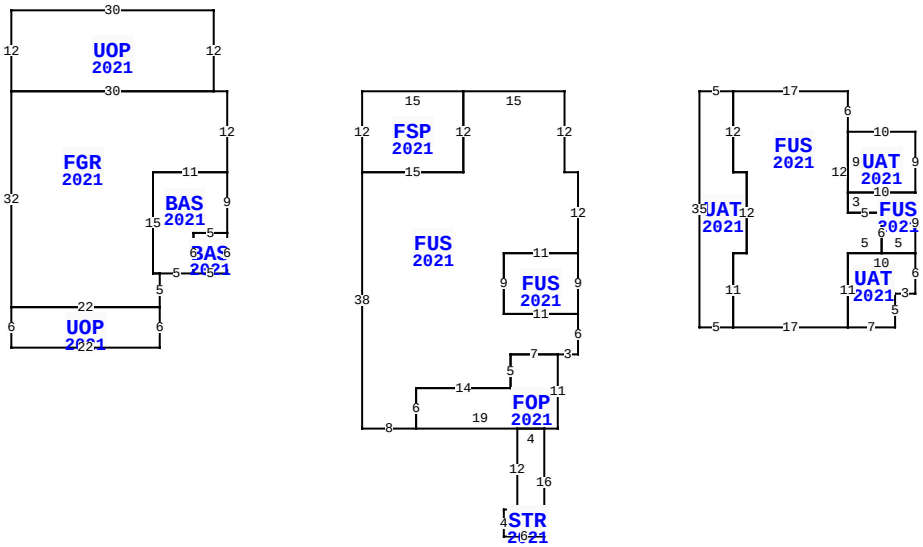

** This building has 15 Sub-Areas

96416 CONTESSA POINT DR, FERNANDINA BEACH

BLD DATE		LGL DATE	
XF DATE		LAND DATE	06/07/2023 MLU
INC DATE		AG DATE	

VALUATION SUMMARY

VALUATION BY	STANDARD
Tax Group: 4	Tax Dist:
BUILDING MARKET VALUE	594,844
TOTAL MARKET OB/XF VALUE	10,700
TOTAL LAND VALUE - MARKET	145,000
TOTAL MARKET VALUE	750,544
SOH/AGL Deduction	164,261
ASSESSED VALUE	586,283
TOTAL EXEMPTION VALUE	0
BASE TAXABLE VALUE	586,283
TOTAL JUST VALUE	750,544
NCON VALUE	0
INCOME VALUE	
PREVIOUS YEAR MKT VALUE	532,985

PERMIT NUM	DESCRIPTION	AMT	ISSUED
C1808933	CO ISSUED	0	11/15/2021
B1808933	NEW CONSTR	281,021	12/01/2018

SALES DATA

OFF RECORD Number	DATE	TYPE INST	Q / U	V / I	RSN CD	SALE PRICE
2522/0134	12/09/2021	WD	Q	I	01	668,600
GRANTOR: NEW ATLANTIC BUILDERS						
GRANTEE: KUBISTA KIRK & JANE						
2214/0630	7/17/2018	SW	U	V	37	100,000
GRANTOR: OB ISLAND HOMES LLC						
GRANTEE: NEW ATLANTIC BUILDE						

BUILDING NOTES

EXTRA FEATURES

LN	OB/XF CODE	DESCRIPTION	BLD	CAP	L	W	UNITS	UT	Adj R	ADJ UNIT PRICE	ORIG COND	YEAR ON	YEAR ACTUAL	Q	% COND	OB/XF MKT VALUE	NOTES
1	0855	CONC PAVER	0	0	0	0	1,070.00	SF	10.00	10.00	100	2021	2021	3	100	10,700	

BUILDING DIMENSIONS

FGR=[YR=2021] W2 UOP=[YR=2021] N12 W30 S12 E30$ W30 S32
UOP=[YR=2021] S6 E22 N6 W22$ E22 N5 BAS=[YR=2021] E5
BAS=[YR=2021] E5 N6 W5 S6$ N6 E5 N9 W11 S15 E1$ W1 N15 E11
N12$ PTR= E20 FSP=[YR=2021] E15 FUS=[YR=2021] E15 S12 E2
S12 FUS=[YR=2021] S9 W11 N9 E11$ W11 S9 E11 S6 W3
FOP=[YR=2021] S11 W2 STR=[YR=2021] S16 W6 N4 E2 N12 E4$ W19
N6 E14 N5 E7$ W7 S5 W14 S6 W8 N38 E15 N12$ S12 W15 N12$ W20$
PTR= E70 UAT=[YR=2021] E5 FUS=[YR=2021] E17 S6
UAT=[YR=2021] E10 S9 FUS=[YR=2021] S9 UAT=[YR=2021] S6 W3
S5 W7 N11 E10$ W5 N6 W5 N3 E10$ W10 N9$ S12 E5 S6 W5 S11 W17
N11 E2 N12 W2 N12$ S12 E2 S12 W2 S11 W5 N35$ W70$.

LAND DESCRIPTION

TOTAL OB/XF 10,700

LN	USE CODE	CLS	LAND USE DESCRIPTION	CAP	RD	LOC ZONE	FRONT	DEPTH	TOT LND UTS	UNIT TYPE	DT	DPTH FACT	% COND	TOT ADJ	UNIT PRICE	ADJ UNIT PRICE	LAND VALUE	OTHER ADJUSTMENTS AND NOTES	YEAR	DENSITY	DECL	FRZ	YR	CONSRV
1	000116	C	SFR MARSH	0			0.00	0.00	1.00	LT		1.00	1.00	1.00	145,000.00	145,000.00	145,000							

REVIEW DATE 01/31/2022 BY KW Total Acres: 0.00 Total Land Value: 145,000 Market: 0 Agricultural: 0 Common: 145,000 PRINTED 08/02/2023 BY SYS