BLOCK 2 LOT 1
IN OR 2202/840
OYSTER BAY #1 PB 5/262

BURNAT MARIOLA & MARIUSZ
96066 OYSTER BAY DR
FERNANDINA BEACH, FL 32034

2023

46-3N-28-5480-0002-0010

NASSAU COUNTY PROPERTY

BUILDING CHARACTERISTICS

ELEMENT	CD	CONSTRUCTION
Exterior Wall	16	WD FR STUC 100
Roof Structur	03	GABLE/HIP 100
Roof Cover	03	COMP SHNGL 100
Interior Wall	05	DRYWALL 100
Interior Floo	12	HARDWOOD 60
Interior Floo	14	CARPET 40
Air Condition	03	CENTRAL 100
Heating Type	04	AIR DUCTED 100
Bedrooms		4 100
Bathrooms		2.5 100
Frame	02	WOOD FRAME 100
Stories	2.	2. 100
Units		0 100
Occupancy	00	NONE 100
Quality	03	Quality Level 03

DOR CODE	0100	SINGLE FAMILY	
MAP NUM		MKT AREA	04
NEIGHBORHOOD/LOC	4024.00		

AREA TYPE	TOTAL GROSS AREA	PCT OF BASE	TOT ADJ AREA	SUBAREA MARKET VALUE
BAS	1,943	100	1,943	252,978
FGR	713	55	392	51,038
FOP	120	30	36	4,687
FSP	124	40	50	6,510
FSP	270	40	108	14,061
FUS	1,332	100	1,332	173,425
TOTALS	4,502		3,861	502,700

MARKET ADJUSTMENTS

TYPE	MDL	EFF. AREA	TOT ADJ PTS	EFF. BASE RATE	REPL. COST NEW	AYB	EYB	ECON	FNCT		NORM	% COND
0500	01	3,861	97.2000	138.51	534,787	2006	2010	0	0	0	6.00	94.00

1 SFR CUST - 100% - 2019 Heated Area: 3275 HX Base Yr 2019

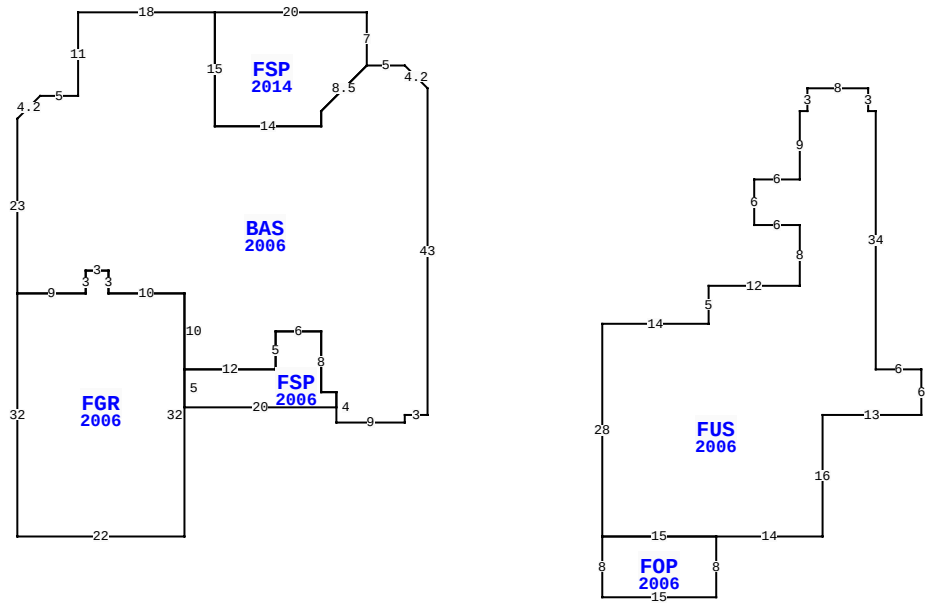

96066 OYSTER BAY DR, FERNANDINA BEACH

BLD DATE		LGL DATE	
XF DATE		LAND DATE	06/07/2023 MLU
INC DATE		AG DATE	

VALUATION SUMMARY

VALUATION BY		STANDARD
Tax Group: 4	Tax Dist:	
BUILDING MARKET VALUE		502,700
TOTAL MARKET OB/XF VALUE		13,640
TOTAL LAND VALUE - MARKET		135,000
TOTAL MARKET VALUE		651,340
SOH/AGL Deduction		243,927
ASSESSED VALUE		407,413
TOTAL EXEMPTION VALUE	HX HB	50,000
BASE TAXABLE VALUE		357,413
TOTAL JUST VALUE		651,340
NCON VALUE		0
INCOME VALUE		
PREVIOUS YEAR MKT VALUE		531,431

PERMIT NUM	DESCRIPTION	AMT	ISSUED
B1429687	SCRNROOM	3,432	12/01/2014
C0312019	CO ISSUED	265,000	06/02/2003
B0312019	NEW CONSTR	265,000	06/02/2003
P0363501	NEW CONSTR	265,000	06/02/2003

SALES DATA

OFF RECORD Number	DATE	TYPE INST	Q U	V I	RSN CD	SALE PRICE
2202/0840	6/07/2018	WD	Q	I	01	490,000
GRANTOR: RYAN LIS T &						
GRANTEE: BURNAT MARIOLA & MA						
1866/1101	7/01/2013	WD	Q	I	02	350,000
GRANTOR: FUGATE SARAH E TRUSTE						
GRANTEE: RYAN LIS T & HEIDI						

BUILDING NOTES

EXTRA FEATURES

LN	OB/XF CODE	DESCRIPTION	BLD	CAP	L	W	UNITS	UT	Adj R	ADJ UNIT PRICE	ORIG COND	YEAR ON	YEAR ACTUAL	Q	% COND	OB/XF MKT VALUE	NOTES
1	0500	FP-PRE FAB	0	100	0	0	1.00	UT	3,500.00	3,500.00	100	2006	2006	3	91	3,185	
2	0812	CONCRETE C	0	100	0	0	1,449.00	SF	4.00	4.00	100	2006	2006	3	88	5,100	
3	0462	ST/AL FNC	0	100	125	0	500.00	SF	10.00	10.00	100	2018	2018	3	90	4,500	
4	0463	FENCE GATE	0	100	0	0	3.00	UT	300.00	300.00	100	2018	2018	3	95	855	

BUILDING DIMENSIONS

BAS=[YR=2006] U3 L3 W5 FSP=[YR=2014] N7W20 S15E14 N2 U6 R6 $ D6 L6 S2 W14 N15 W18 S11 W5 D3 L3 S23 FGR=[YR=2006] S32 E22 N32 W10N3 W3 S3 W9 $ E9 N3 E3 S3 E10 S10 FSP=[YR=2006] S5 E20 N2 W2 N8 W6 S5 W12 $ E12 N5 E6 S8 E2 S4E09 N1 E3 N43 $ PTR=E50 FUS=[YR=2006] E8 S3 E1 S34 E6 S6 W13 S16 W14 FOP=[YR=2006] S8 W15 N8 E15 $ W15 N28 E14 N5 E12 N8 W6 N6 E6 N9 E1 N3 $ W50 $.

LAND DESCRIPTION

TOTAL OB/XF 13,640

LN	USE CODE	CLS	LAND USE DESCRIPTION	CAP	RD	LOC ZONE	FRONT	DEPTH	TOT LND UTS	UNIT TYPE	DT	DPTH FACT	% COND	TOT ADJ	UNIT PRICE	ADJ UNIT PRICE	LAND VALUE	OTHER ADJUSTMENTS AND NOTES	YEAR	DENSITY	DECL	FRZ	YR	CONSRV
1	000133	C	SFR LAKE	100		RS-1	0.00	0.00	1.00	LT		1.00	1.00	1.00	135,000.00	135,000.00	135,000							

REVIEW DATE 12/28/2018 BY KW Total Acres: 0.00 Total Land Value: 135,000 Market: 0 Agricultural: 0 Common: 135,000 PRINTED 08/02/2023 BY SYS