LOT 32
LANCEFORD CREEK PLANTATION
PB 5/110-111

HENLINE GERALD BRADLEY & DUSTI LYNN
96134 HEATH POINT LANE
FERNANDINA BEACH, FL 32034

2023

46-3N-28-5100-0032-0000

NASSAU COUNTY PROPERTY

BUILDING CHARACTERISTICS

ELEMENT	CD	CONSTRUCTION
Exterior Wall	31	HARDIE BRD 100
Roof Structur	08	IRREGULAR 100
Roof Cover	03	COMP SHNGL 100
Interior Wall	05	DRYWALL 100
Interior Floo	12	HARDWOOD 60
Interior Floo	14	CARPET 40
Air Condition	03	CENTRAL 100
Heating Type	04	AIR DUCTED 100
Bedrooms		4 100
Bathrooms		4.5 100
Frame	02	WOOD FRAME 100
Stories	2.	2. 100
Units		0 100
Occupancy	00	NONE 100
Quality	05	Quality Level 05
DOR CODE	0100	SINGLE FAMILY
MAP NUM		MKT AREA 04
NEIGHBORHOOD/LOC	4080.00	

AREA TYPE	TOTAL GROSS AREA	PCT OF BASE	TOT ADJ AREA	SUBAREA MARKET VALUE
BAS	2,182	100	2,182	327,094
FGR	858	55	472	70,755
FOP	270	30	81	12,142
FOP	360	30	108	16,190
FOP	377	30	113	16,939
FOP	410	30	123	18,438
FUS	962	100	962	144,209
SFB	48	80	38	5,696
TOTALS	5,467		4,079	611,464

MARKET ADJUSTMENTS

TYPE	MDL	EFF. AREA	TOT ADJ PTS	EFF. BASE RATE	REPL. COST NEW	AYB	EYB	ECON	FNCT		NORM	% COND
0500	01	4,079	111.3200	158.63	647,052	2010	2010	0	0	0	5.50	94.50

1 SFR CUST – 100% - 2020 Heated Area: 3182 HX Base Yr 2020

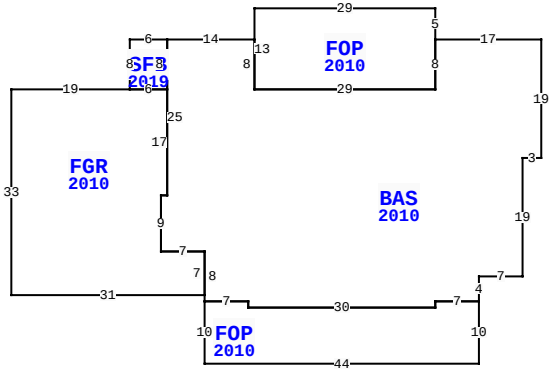

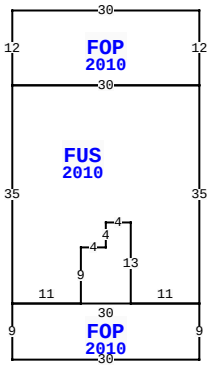

96134 HEATH POINT LN, FERNANDINA BEACH

BLD DATE		LGL DATE	
XF DATE		LAND DATE	06/08/2023 MLU
INC DATE		AG DATE	

VALUATION SUMMARY

VALUATION BY		STANDARD
Tax Group: 4	Tax Dist:	
BUILDING MARKET VALUE		728,396
TOTAL MARKET OB/XF VALUE		120,239
TOTAL LAND VALUE - MARKET		155,250
TOTAL MARKET VALUE		1,003,885
SOH/AGL Deduction		276,813
ASSESSED VALUE		727,072
TOTAL EXEMPTION VALUE	HX HB	50,000
BASE TAXABLE VALUE		677,072
TOTAL JUST VALUE		1,003,885
NCON VALUE		0
INCOME VALUE		
PREVIOUS YEAR MKT VALUE		782,931

PERMIT NUM	DESCRIPTION	AMT	ISSUED
B2003675	GARAGE	95,000	04/30/2020
B200599	SWIM POOL	48,000	01/21/2020
C19370	CO ISSUED	0	09/01/2010
E22729	ELEC OTHER	0	06/01/2010
M13122	OTHER	0	07/01/2007
P12583	OTHER	0	07/01/2007

SALES DATA

OFF RECORD Number	DATE	TYPE INST	Q U	V I	RSN CD	SALE PRICE
2263/1129	3/20/2019	WD	Q	I	01	612,500
GRANTOR: ALVERSON SAMUEL K						
GRANTEE: HENLINE GERALD BRAD						
1670/1669	4/01/2010	QC	U	V	11	100
GRANTOR: PRECURATO MARIE (ALVE						
GRANTEE: ALVERSON SAMUEL K						

BUILDING NOTES

BUILDING DIMENSIONS

BAS=[YR=2010] W17 FOP=[YR=2010] N5 W29 S13 E29 N8 $ S8 W29 N8 W14 SFB=[YR=2019] W6 S8 FGR=[YR=2010] W19 S33 E31 N7 W7 N9 E1 N17 W6$ E6 N8$ S25 W1 S9 E7 S8 FOP=[YR=2010] S10 E44 N10 W7 S1 W30 N1 W7 $ E7 S1 E30 N1 E7 N4 E7 N19 E3 N19 $ PTR= E30 FOP=[YR=2010] E30 S12 FUS=[YR=2010] S35 FOP=[YR=2010] S9 W30 N9 E30$ W11 N13 W4 S4 W4 S9 W11 N35 E30$ W30 N12$ W30 $.

EXTRA FEATURES

LN	OB/XF CODE	DESCRIPTION	BLD	CAP	L	W	UNITS	UT	Adj R	ADJ UNIT PRICE	ORIG COND	YEAR ON	YEAR ACTUAL	Q	% COND	OB/XF MKT VALUE	NOTES
1	0500	FP-PRE FAB	0	100	0	0	1.00	UT	3,500.00	3,500.00	100	2010	2010	3	94	3,290	
2	0812	CONCRETE C	0	100	0	0	1,042.00	SF	4.00	4.00	100	2010	2010	3	92	3,835	
3	0812	CONCRETE C	0	100	0	0	1,498.00	SF	4.00	4.00	100	2020	2020	3	99	5,932	
4	0600	SUMMER KIT	0	100	0	0	1.00	UT	10,000.00	10,000.00	100	2010	2010	3	50	5,000	
5	0462	ST/AL FNC	0	100	312	0	1,560.00	SF	10.00	10.00	100	2020	2020	3	95	14,820	
6	0463	FENCE GATE	0	100	0	0	3.00	UT	300.00	300.00	100	2020	2020	3	98	882	
7	0857	SANDSTONE	0	100	0	0	1,630.00	SF	16.00	16.00	100	2020	2020	3	100	26,080	
8	0861	POOL GUNIT	0	100	32	20	640.00	SF	85.00	85.00	100	2020	2020	3	95	51,680	
9	0877	JACUZZI	0	100	0	0	1.00	UT	2,000.00	2,000.00	100	2020	2020	3	93	1,860	
10	0885	WATERSCAPE	0	100	0	0	1.00	UT	5,000.00	5,000.00	100	2020	2020	3	100	5,000	

TOTAL OB/XF 118,379

LAND DESCRIPTION

LN	USE CODE	CLS	LAND USE DESCRIPTION	CAP	RD	LOC ZONE	FRONT	DEPTH	TOT LND UTS	UNIT TYPE	DT	DPTH FACT	% COND	TOT ADJ	UNIT PRICE	ADJ UNIT PRICE	LAND VALUE	OTHER ADJUSTMENTS AND NOTES	YEAR	DENSITY	DECL	FRZ	YR	CONSRV
1	000133	C	SFR LAKE	100	0006	RS-1	0.00	0.00	1.00	LT		1.00	1.00	1.15	135,000.00	155,250.00	155,250							

REVIEW DATE 03/05/2021 BY KW Total Acres: 0.00 Total Land Value: 155,250 Market: 0 Agricultural: 0 Common: 155,250 PRINTED 08/02/2023 BY SYS

LOT 32
LANCEFORD CREEK PLANTATION
PB 5/110-111

HENLINE GERALD BRADLEY & DUSTI LYNN
96134 HEATH POINT LANE
FERNANDINA BEACH, FL 32034

2023

46-3N-28-5100-0032-0000

NASSAU COUNTY PROPERTY

BUILDING CHARACTERISTICS

ELEMENT	CD	CONSTRUCTION
Exterior Wall	10	ABOVE AVG 100
Roof Structur	08	IRREGULAR 100
Roof Cover	03	COMP SHNGL 100
Interior Wall	05	DRYWALL 100
Interior Floo	14	CARPET 60
Interior Floo	13	LVT/LAMNT 40
Air Condition	03	CENTRAL 100
Heating Type	04	AIR DUCTED 100
Bedrooms		1 100
Bathrooms		1.5 100
Frame	02	WOOD FRAME 100
Stories	2.	2. 100
Units		0 100
Quality	04	Quality Level 04
DOR CODE	0100	SINGLE FAMILY
MAP NUM		MKT AREA 04
NEIGHBORHOOD/LOC	4080.00	

AREA TYPE	TOTAL GROSS AREA	PCT OF BASE	TOT ADJ AREA	SUBAREA MARKET VALUE
BAL	88	15	13	991
BAS	16	100	16	1,220
BAS	336	100	336	25,612
FGR	672	55	370	28,204
FOP	78	30	23	1,753
FOP	160	30	48	3,659
FUS	645	100	645	49,166
STR	76	10	8	610
UAT	72	10	7	533
UAT	80	10	8	610
TOTALS	2,550		1,534	116,932

MARKET ADJUSTMENTS

TYPE	MDL	EFF. AREA	TOT ADJ PTS	EFF. BASE RATE	REPL. COST NEW	AYB	EYB	ECON	FNCT		NORM	% COND
0150	11	1,534	153.2203	76.61	117,520	2020	2020	0	0	0	0.50	99.50

2 ACCESORY U – 100% - 2020 Heated Area: 997 HX Base Yr 2020

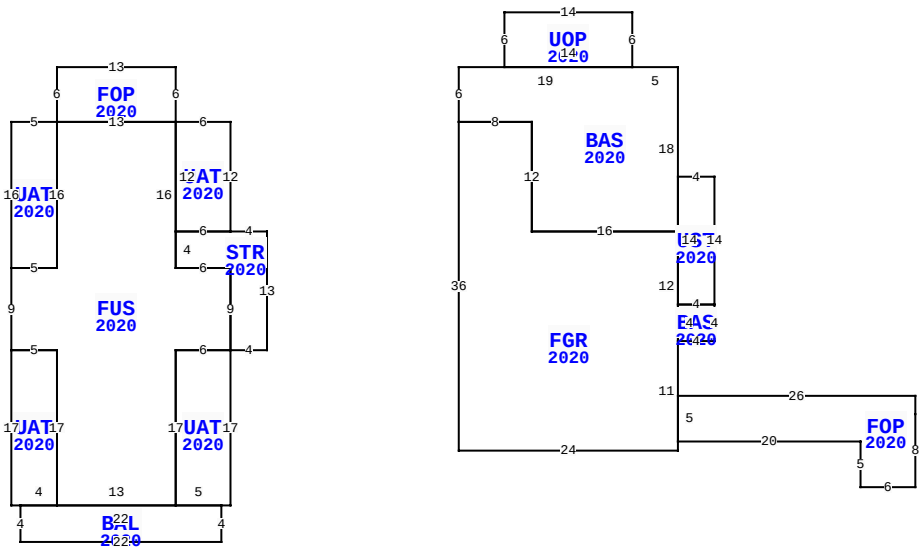

** This building has 14 Sub-Areas

96134 HEATH POINT LN, FERNANDINA BEACH

BLD DATE		LGL DATE	
XF DATE		LAND DATE	06/08/2023 MLU
INC DATE		AG DATE	

VALUATION SUMMARY

VALUATION BY		STANDARD
Tax Group: 4	Tax Dist:	
BUILDING MARKET VALUE		728,396
TOTAL MARKET OB/XF VALUE		120,239
TOTAL LAND VALUE - MARKET		155,250
TOTAL MARKET VALUE		1,003,885
SOH/AGL Deduction		276,813
ASSESSED VALUE		727,072
TOTAL EXEMPTION VALUE	HX HB	50,000
BASE TAXABLE VALUE		677,072
TOTAL JUST VALUE		1,003,885
NCON VALUE		0
INCOME VALUE		
PREVIOUS YEAR MKT VALUE		782,931

PERMIT NUM	DESCRIPTION	AMT	ISSUED
R10491	REPAIR/RRF	3,940	06/01/2007
E19111	ELEC OTHER	2,000	04/01/2007
P12309	OTHER	0	04/01/2007
B19370	NEW CONSTR	450,000	01/01/2007

SALES DATA

OFF RECORD Number	DATE	TYPE INST	Q / U	V / I	RSN CD	SALE PRICE
2263/1129	3/20/2019	WD	Q	I	01	612,500
GRANTOR: ALVERSON SAMUEL K						
GRANTEE: HENLINE GERALD BRAD						
1670/1669	4/01/2010	QC	U	V	11	100
GRANTOR: PRECURATO MARIE (ALVE						
GRANTEE: ALVERSON SAMUEL K						

BUILDING NOTES

BUILDING DIMENSIONS

BAS=[YR=2020] W5 UOP=[YR=2020] N6 W14 S6 E14$ W19 S6 FGR=[YR=2020] S36 E24 N1 FOP=[YR=2020] E20 S5 E6 N8 N2 W26 S5$ N11 BAS=[YR=2020] E4 N4 UST=[YR=2020] N14 W4 S14 E4$ W4 S4$ N12 W16 N12 W8$ E8 S12 E16 N18 $ PTR= W55 FOP=[YR=2020] W13 S6 UAT=[YR=2020] W5 S16 FUS=[YR=2020] S9 UAT=[YR=2020] S17 E1 BAL=[YR=2020] S4 E22 N4 UAT=[YR=2020] E1 N17 W6 S17 E5$ W22$ E4 N17 W5$ E5 S17 E13 N17 E6 STR=[YR=2020] E4 N13 W4 UAT=[YR=2020] N12 W6 S12 E6$ W6 S4 E6 S9$ N9 W6 N16 W13 S16 W5$ E5 N16$ E13 N6$ E55$.

EXTRA FEATURES

L N	OB/XF CODE	DESCRIPTION	BLD	CAP	L	W	UNITS	UT	Adj R	ADJ UNIT PRICE	ORIG COND	YEAR ON	YEAR ACTUAL	Q	% COND	OB/XF MKT VALUE	NOTES
11	0871	POOL HTR R	0	100	0	0	1.00	UT	2,000.00	2,000.00	100	2020	2020	3	93	1,860	

LAND DESCRIPTION

TOTAL OB/XF 1,860

L N	USE CODE	CLS	LAND USE DESCRIPTION	CAP	R D	LOC ZONE	FRONT	DEPTH	TOT LND UTS	UNIT TYPE	D T	DPTH FACT	% COND	TOT ADJ	UNIT PRICE	ADJ UNIT PRICE	LAND VALUE	OTHER ADJUSTMENTS AND NOTES	YEAR	DENSITY	DECL	FRZ	YR	CONSRV

REVIEW DATE 03/05/2021 BY KW Total Acres: 0.00 Total Land Value: 155,250 Market: 0 Agricultural: 0 Common: 155,250 PRINTED 08/02/2023 BY SYS