LOT 29
IN OR 1829/1751
LANCEFORD CREEK PLANTATION

WIENBARG FRED W JR & PATRICIA
96084 LANCEFORD LN
FERNANDINA BEACH, FL 32034

2023

46-3N-28-5100-0029-0000

NASSAU COUNTY PROPERTY

BUILDING CHARACTERISTICS

ELEMENT	CD	CONSTRUCTION
Exterior Wall	31	HARDIE BRD 90
Exterior Wall	21	STONE 10
Roof Structur	08	IRREGULAR 100
Roof Cover	03	COMP SHNGL 100
Interior Wall	05	DRYWALL 100
Interior Floo	14	CARPET 60
Interior Floo	11	CLAY TILE 40
Air Condition	03	CENTRAL 100
Heating Type	04	AIR DUCTED 100
Bedrooms		5 100
Bathrooms		3.5 100
Frame	02	WOOD FRAME 100
Stories	2.	2. 100
Units		0 100
Occupancy	00	NONE 100
Quality	05	Quality Level 05
DOR CODE	0100	SINGLE FAMILY
MAP NUM		MKT AREA 04
NEIGHBORHOOD/LOC	4080.00	

AREA TYPE	TOTAL GROSS AREA	PCT OF BASE	TOT ADJ AREA	SUBAREA MARKET VALUE
BAS	2,105	100	2,105	318,747
FGR	612	55	337	51,030
FOP	312	30	94	14,234
FOP	548	30	164	24,834
FUS	1,081	100	1,081	163,689
STR	56	10	6	909
TOTALS	4,714		3,787	573,442

MARKET ADJUSTMENTS

TYPE	MDL	EFF. AREA	TOT ADJ PTS	EFF. BASE RATE	REPL. COST NEW	AYB	EYB	ECON	FNCT		NORM	% COND
0500	01	3,787	114.9390	163.79	620,273	2006	2006	0	0	0	7.55	92.45

1 SFR CUST - 100% - 2013 Heated Area: 3186 HX Base Yr 2013

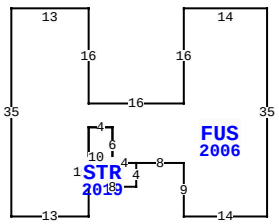

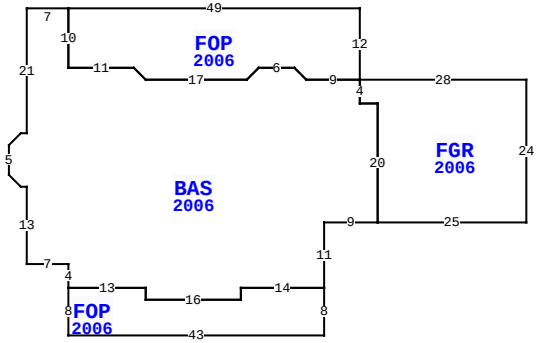

96084 LANCEFORD LN, FERNANDINA BEACH

BLD DATE		LGL DATE	
XF DATE		LAND DATE	06/08/2023 MLU
INC DATE		AG DATE	

VALUATION SUMMARY

VALUATION BY		STANDARD
Tax Group: 4	Tax Dist:	
BUILDING MARKET VALUE		573,442
TOTAL MARKET OB/XF VALUE		54,550
TOTAL LAND VALUE - MARKET		155,250
TOTAL MARKET VALUE		783,242
SOH/AGL Deduction		330,311
ASSESSED VALUE		452,931
TOTAL EXEMPTION VALUE	HX HB	50,000
BASE TAXABLE VALUE		402,931
TOTAL JUST VALUE		783,242
NCON VALUE		0
INCOME VALUE		
PREVIOUS YEAR MKT VALUE		591,200

PERMIT NUM	DESCRIPTION	AMT	ISSUED
M1701862	H/AC	0	03/01/2017
B18127	SCRN RM	10,000	10/31/2006
B17443	SWIM POOL	25,000	03/01/2006
WE00442	OTHER	0	02/01/2006
E16340	ELEC OTHER	9,000	12/01/2005
C16680	CO ISSUED	450,000	11/01/2005

SALES DATA

OFF RECORD Number	DATE	TYPE INST	Q / U	V / I	RSN CD	SALE PRICE
1829/1751	11/30/2012	WD	Q	I	02	450,000
GRANTOR: BEASLEY TIMOTHY C & G						
GRANTEE: WIENBARG FRED W JR						
1335/0935	7/22/2005	WD	Q	V		169,000
GRANTOR: STERLING MARK CORPORA						
GRANTEE: BEASLEY TIMOTHY C &						

BUILDING NOTES

BUILDING DIMENSIONS

BAS=[YR=2006] W7 S21 W1 D2 L2 S5 D2 R2 E1 S13 E7 S4
FOP=[YR=2006] S8 E43 N8 W14 S2 W16 N2 W13 $ E13 S2 E16 N2
E14 N11 E9 FGR=[YR=2006] E25 N24 W28 S4 E3 S20 $ N20 W3 N4
FOP=[YR=2006] N12 W49 S10 E11 D2 R2 E17 U2 R2 E6 D2 R2
E9 $ W9 U2 L2 W6 D2 L2 W17 U2 L2 W11 N10 $ PTR= W75
FUS=[YR=2006] E13 S16 E16 N16 E14 S35 W14 N9 W8
STR=[YR=2019] S4 W8 N10 E4 S6 E4$ W4 N6 W4 S15 W13 N35 $ E75
$.

EXTRA FEATURES

LN	OB/XF CODE	DESCRIPTION	BLD	CAP	L	W	UNITS	UT	Adj R	ADJ UNIT PRICE	ORIG COND	YEAR ON	YEAR ACTUAL	Q	% COND	OB/XF MKT VALUE	NOTES
1	0812	CONCRETE C	0	100	0	0	2,518.00	SF	4.00	4.00	100	2006	2006	3	88	8,863	
2	0861	POOL GUNIT	0	100	0	0	462.00	SF	85.00	85.00	100	2006	2006	3	48	18,850	
3	0911	SCRN RM A	0	100	0	0	1,426.00	SF	17.50	17.50	100	2006	2006	3	31	7,736	
4	0845	KOOL DECK	0	100	0	0	974.00	SF	7.25	7.25	100	2006	2006	3	88	6,214	
5	1123	CB 8"	0	100	0	0	186.00	SF	6.15	6.15	100	2006	2006	3	88	1,007	
6	0462	ST/AL FNC	0	100	350	0	1,400.00	SF	10.00	10.00	100	2015	2015	3	81	11,340	
7	0463	FENCE GATE	0	100	0	0	2.00	UT	300.00	300.00	100	2015	2015	3	90	540	

LAND DESCRIPTION

TOTAL OB/XF 54,550

LN	USE CODE	CLS	LAND USE DESCRIPTION	CAP	RD	LOC ZONE	FRONT	DEPTH	TOT LND UTS	UNIT TYPE	DT	DPTH FACT	% COND	TOT ADJ	UNIT PRICE	ADJ UNIT PRICE	LAND VALUE	OTHER ADJUSTMENTS AND NOTES	YEAR	DENSITY	DECL	FRZ	YR	CONSRV
1	000133	C	SFR LAKE	100		RS-1	0.00	0.00	1.00	LT		1.00	1.00	1.15	135,000.00	155,250.00	155,250							

REVIEW DATE 11/26/2019 BY KWA Total Acres: 0.00 Total Land Value: 155,250 Market: 0 Agricultural: 0 Common: 155,250 PRINTED 08/02/2023 BY SYS