LOT 22
ESMT PT OR 1028/831
HIGH POINTE PB 6/273

LOZANO SELEDONIO & VICKY LYNN
96240 HIGH POINTE DRIVE
FERNANDINA BEACH, FL 32034

2023

46-3N-28-509H-0022-0000

NASSAU COUNTY PROPERTY

BUILDING CHARACTERISTICS

ELEMENT	CD	CONSTRUCTION
Exterior Wall	20	FACE BRICK 100
Roof Structur	03	GABLE/HIP 100
Roof Cover	03	COMP SHNGL 100
Interior Wall	05	DRYWALL 100
Interior Floo	14	CARPET 60
Interior Floo	11	CLAY TILE 40
Air Condition	03	CENTRAL 100
Heating Type	04	AIR DUCTED 100
Bedrooms		4 100
Bathrooms		3 100
Frame	02	WOOD FRAME 100
Stories	1.5	1.5 100
Units		0 100
Occupancy	00	NONE 100
Quality	03	Quality Level 03

DOR CODE 0100 SINGLE FAMILY
MAP NUM | MKT AREA 04
NEIGHBORHOOD/LOC 4022.00

AREA TYPE	TOTAL GROSS AREA	PCT OF BASE	TOT ADJ AREA	SUBAREA MARKET VALUE
BAS	2,520	100	2,520	334,724
FGR	552	55	304	40,380
FOP	20	30	6	797
FOP	168	30	50	6,642
FSP	80	40	32	4,250
FUS	402	100	402	53,397
TOTALS	3,742		3,314	440,189

MARKET ADJUSTMENTS

TYPE	MDL	EFF. AREA	TOT ADJ PTS	EFF. BASE RATE	REPL. COST NEW	AYB	EYB	ECON	FNCT		NORM	% COND
0500	01	3,314	104.1440	148.41	491,831	2006	2008	0	0	0	10.50	89.50

1 SFR CUST – 100% - 2022 Heated Area: 2922 HX Base Yr 2022

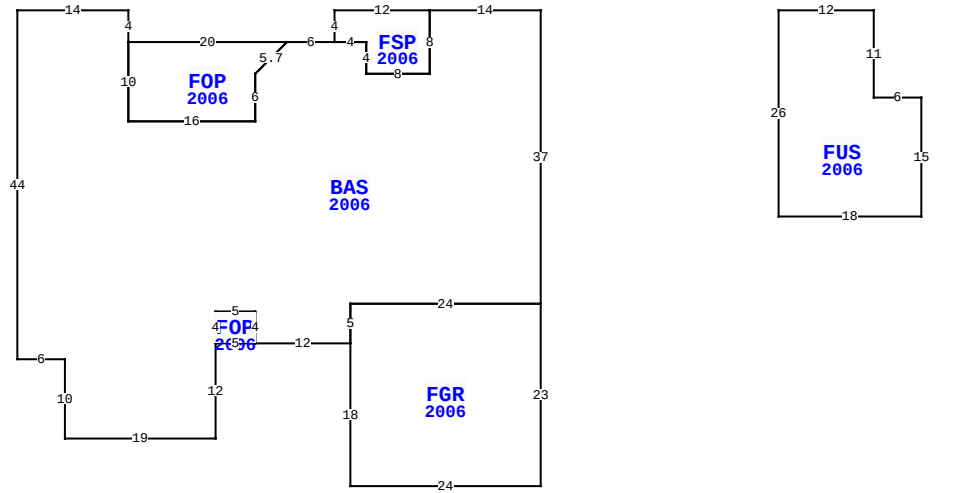

96240 HIGH POINTE DR, FERNANDINA BEACH

BLD DATE		LGL DATE	
XF DATE		LAND DATE	
INC DATE		AG DATE	

NASSAU COUNTY PROPERTY — VALUATION SUMMARY

VALUATION BY		STANDARD
Tax Group: 4	Tax Dist:	
BUILDING MARKET VALUE		440,189
TOTAL MARKET OB/XF VALUE		12,092
TOTAL LAND VALUE - MARKET		100,000
TOTAL MARKET VALUE		552,281
SOH/AGL Deduction		163,350
ASSESSED VALUE		388,931
TOTAL EXEMPTION VALUE	HX HB VX	55,000
BASE TAXABLE VALUE		333,931
TOTAL JUST VALUE		552,281
NCON VALUE		0
INCOME VALUE		
PREVIOUS YEAR MKT VALUE		449,209

PERMIT NUM	DESCRIPTION	AMT	ISSUED
B2101691	1 DOOR	1,250	02/01/2021
B2100848	1 GARAGE DOOR	8,067	01/26/2021
B2100508	2 WINDOWS	1,815	01/19/2021
E15658	ELEC OTHER	1,975	09/01/2005
M10321	MECH OTHER	0	09/01/2005
P09674	OTHER	0	07/01/2005

SALES DATA

OFF RECORD Number	DATE	TYPE INST	Q / U	V / I	RSN CD	SALE PRICE
2399/0365	10/09/2020	WD	Q	I	01	442,000
GRANTOR: HANNAFORD DANA & MARY						
GRANTEE: LOZANO SELEDONIO &						
1237/0618	6/11/2004	WD	Q	V		108,000
GRANTOR: HILL R DENISE						
GRANTEE: HANNAFORD DANA & MA						

BUILDING NOTES

BUILDING DIMENSIONS

BAS=[YR=2006;ORIG=0,0] W14 S8 W8 N4 W4 W6 D4L4 S6 W16 N10 N4 W14 S44 E6 S10 E19 N12 N4 E5 S4 E12 N5 E24 N37 $
FGR=[YR=2006;ORIG=-24,42] S18 E24 N23 W24 S5 $
FUS=[YR=2006;ORIG=30,0] E12 S11 E6 S15 W18 N26 $
FOP=[YR=2006;ORIG=-32,4] D4L4 S6 W16 N10 E20 $
FSP=[YR=2006;ORIG=-14,0] S8 W8 N4 W4 N4 E12 $
FOP=[YR=2006;ORIG=-41,42] N4 E5 S4 W5 $
PTR=[ORIG=0,0] E30 W30 $
.

EXTRA FEATURES

LN	OB/XF CODE	DESCRIPTION	BLD	CAP	L	W	UNITS	UT	Adj R	ADJ UNIT PRICE	ORIG COND	YEAR ON	YEAR ACTUAL	Q	% COND	OB/XF MKT VALUE	NOTES
1	0500	FP-PRE FAB	0	100	0	0	1.00	UT	3,500.00	3,500.00	100	2006	2006	3	91	3,185	
2	0812	CONCRETE C	0	100	0	0	2,385.00	SF	4.00	4.00	100	2006	2006	3	88	8,395	
3	1127	BRICK 8"	0	100	0	0	48.00	SF	11.00	11.00	100	2006	2006	3	97	512	

LAND DESCRIPTION

TOTAL OB/XF 12,092

LN	USE CODE	CLS	LAND USE DESCRIPTION	CAP	RD	LOC ZONE	FRONT	DEPTH	TOT LND UTS	UNIT TYPE	DT	DPTH FACT	% COND	TOT ADJ	UNIT PRICE	ADJ UNIT PRICE	LAND VALUE	OTHER ADJUSTMENTS AND NOTES	YEAR	DENSITY	DECL	FRZ	YR	CONSRV
1	000100	C	SFR	100		RS-1	0.00	0.00	1.00	LT		1.00	1.00	1.00	100,000.00	100,000.00	100,000							

REVIEW DATE 01/11/2017 BY KW Total Acres: 0.00 Total Land Value: 100,000 Market: 0 Agricultural: 0 Common: 100,000 PRINTED 08/02/2023 BY SYS