LOT 29
FIDDLERS WALK PB 5/237

GAMBLE LINDA/PANKE JENNIFER L
96090 HIDDEN MARSH LANE
FERNANDINA BEACH, FL 32034

2023

46-3N-28-507F-0029-0000

BUILDING CHARACTERISTICS

ELEMENT	CD	CONSTRUCTION
Exterior Wall	16	WD FR STUC 100
Roof Structur	03	GABLE/HIP 100
Roof Cover	03	COMP SHNGL 100
Interior Wall	05	DRYWALL 100
Interior Floo	11	CLAY TILE 60
Interior Floo	14	CARPET 40
Air Condition	03	CENTRAL 100
Heating Type	04	AIR DUCTED 100
Bedrooms		3 100
Bathrooms		2 100
Frame	02	WOOD FRAME 100
Stories	1.	1. 100
Units		0 100
Occupancy	00	NONE 100
Quality	03	Quality Level 03
DOR CODE	0100	SINGLE FAMILY
MAP NUM		MKT AREA 04
NEIGHBORHOOD/LOC	4021.00	

AREA TYPE	TOTAL GROSS AREA	PCT OF BASE	TOT ADJ AREA	SUBAREA MARKET VALUE
BAS	1,892	100	1,892	229,469
FGR	441	55	243	29,472
FOP	154	30	46	5,579
FOP	224	30	67	8,126
UOP	96	20	19	2,304
USP	88	30	26	3,154
TOTALS	2,895		2,293	278,104

MARKET ADJUSTMENTS

TYPE	MDL	EFF. AREA	TOT ADJ PTS	EFF. BASE RATE	REPL. COST NEW	AYB	EYB	ECON	FNCT		NORM	% COND
0900	01	2,293	113.4840	134.76	309,005	2000	2002	0	0	0	10.00	90.00

1 SNGL FAM – 100% - 2002 Heated Area: 1892 HX Base Yr 2002

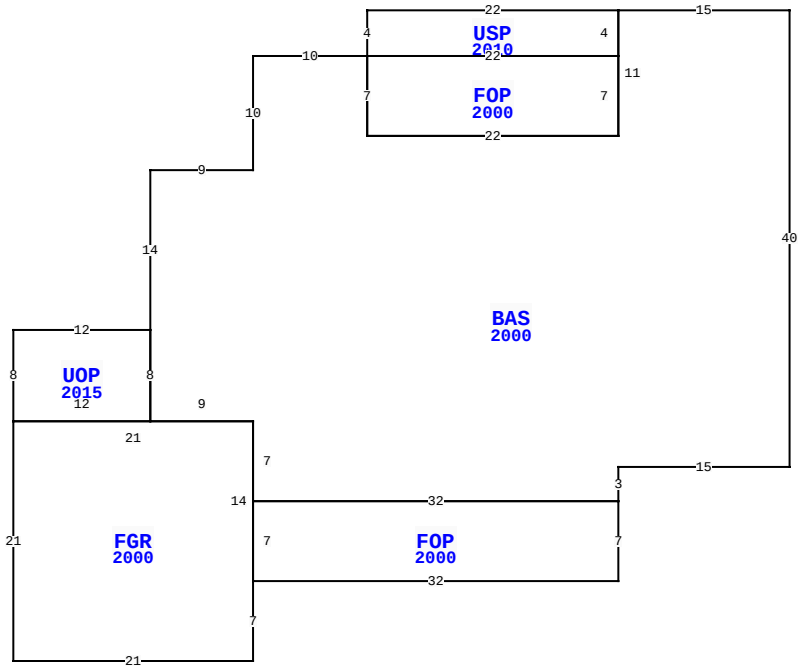

96090 HIDDEN MARSH LN, FERNANDINA BEACH

BLD DATE		LGL DATE	
XF DATE		LAND DATE	
INC DATE		AG DATE	

NASSAU COUNTY PROPERTY

PAGE 1 of 1 4

VALUATION SUMMARY

VALUATION BY		STANDARD
Tax Group: 4	Tax Dist:	
BUILDING MARKET VALUE		278,104
TOTAL MARKET OB/XF VALUE		23,654
TOTAL LAND VALUE - MARKET		80,000
TOTAL MARKET VALUE		381,758
SOH/AGL Deduction		203,993
ASSESSED VALUE		177,765
TOTAL EXEMPTION VALUE	HX HB WX	55,000
BASE TAXABLE VALUE		122,765
TOTAL JUST VALUE		381,758
NCON VALUE		0
INCOME VALUE		
PREVIOUS YEAR MKT VALUE		341,221

PERMIT NUM	DESCRIPTION	AMT	ISSUED
R2100828	REPAIR/RRF	16,046	01/25/2021
M1801685	H/AC	0	02/01/2018
B1703508	CARPORT	8,388	06/01/2017
B0108202	XFOB	7,000	04/01/2001
E017937	CHNGE SRVC	350	04/01/2001
006852	NEW CONSTR	92,720	02/01/2000

SALES DATA

OFF RECORD Number	DATE	TYPE INST	Q / U	V / I	RSN CD	SALE PRICE
2580/0882	7/21/2022	QC	U	I	11	100
GRANTOR: GAMBLE LINDA						
GRANTEE: GAMBLE LINDA J & JE						
0968/1387	1/30/2001	WD	Q	I		169,800
GRANTOR: CLAXTON EDWARD & CHRI						
GRANTEE: GAMBLE CHRISTOPHER						

BUILDING NOTES

BUILDING DIMENSIONS

BAS=[YR=2000] W15 USP=[YR=2010] W22 S4 FOP=[YR=2000] S7 E22 N7 W22 $ E22 N4 $ S11 W22 N7 W10 S10 W9 S14 UOP=[YR=2015] W12 S8 FGR=[YR=2000] S21 E21 N7 FOP=[YR=2000] E32 N7 W32 S7 $ N14 W21 $ E12 N8$ S8 E9 S7 E32 N3 E15 N40$.

EXTRA FEATURES

LN	OB/XF CODE	DESCRIPTION	BLD	CAP	L	W	UNITS	UT	Adj R	ADJ UNIT PRICE	ORIG COND	YEAR ON	YEAR ACTUAL	Q	% COND	OB/XF MKT VALUE	NOTES
1	0811	CONCRETE B	0	100	0	0	975.00	SF	5.20	5.20	100	2000	2000	3	80	4,056	
2	0810	CONCRETE A	0	100	12	4	48.00	SF	6.83	6.83	100	2000	2000	3	80	262	
3	0877	JACUZZI	0	100	0	0	1.00	UT	1,000.00	1,000.00	100	2000	2000	3	20	200	
4	0911	SCRN RM A	0	100	40	28	1,120.00	SF	17.50	17.50	100	2001	2001	3	20	3,920	
5	0861	POOL GUNIT	0	100	30	14	420.00	SF	85.00	85.00	100	2001	2001	3	29	10,353	
6	0845	KOOL DECK	0	100	0	0	818.00	SF	7.25	7.25	100	2001	2001	3	82	4,863	

LAND DESCRIPTION

TOTAL OB/XF 23,654

LN	USE CODE	CLS	LAND USE DESCRIPTION	CAP	RD	LOC ZONE	FRONT	DEPTH	TOT LND UTS	UNIT TYPE	DT	DPTH FACT	% COND	TOT ADJ	UNIT PRICE	ADJ UNIT PRICE	LAND VALUE	OTHER ADJUSTMENTS AND NOTES	YEAR	DENSITY	DECL	FRZ	YR	CONSRV
1	000100	C	SFR	100		RS-1	0.00	0.00	1.00	LT		1.00	1.00	1.00	80,000.00	80,000.00	80,000							

REVIEW DATE 05/16/2018 BY KW Total Acres: 0.00 Total Land Value: 80,000 Market: 0 Agricultural: 0 Common: 80,000 PRINTED 08/02/2023 BY SYS