LOT 4
IN OR 2205/1476
FIDDLERS WALK PB 5/237

FLORIDA SOUTHERN LIVING LLC
96007 HIDDEN MARSH LANE
FERNANDINA BEACH, FL 32034

2023

46-3N-28-507F-0004-0000

NASSAU COUNTY PROPERTY

BUILDING CHARACTERISTICS

ELEMENT	CD	CONSTRUCTION
Exterior Wall	20	FACE BRICK 50
Exterior Wall	31	HARDIE BRD 50
Roof Structur	08	IRREGULAR 100
Roof Cover	03	COMP SHNGL 100
Interior Wall	05	DRYWALL 100
Interior Floo	12	HARDWOOD 70
Interior Floo	14	CARPET 30
Air Condition	03	CENTRAL 100
Heating Type	04	AIR DUCTED 100
Bedrooms		4 100
Bathrooms		2.5 100
Frame	02	WOOD FRAME 100
Stories	1.5	1.5 100
Units		0 100
Occupancy	00	NONE 100
Quality	05	Quality Level 05
DOR CODE	0100	SINGLE FAMILY
MAP NUM		MKT AREA 04
NEIGHBORHOOD/LOC	4021.00	

AREA TYPE	TOTAL GROSS AREA	PCT OF BASE	TOT ADJ AREA	SUBAREA MARKET VALUE
BAS	2,688	100	2,688	317,990
FGR	662	55	364	43,061
FOP	96	30	29	3,430
FOP	120	30	36	4,259
FUS	402	100	402	47,556
PTO	180	5	9	1,065
TOTALS	4,148		3,528	417,361

MARKET ADJUSTMENTS

TYPE	MDL	EFF. AREA	TOT ADJ PTS	EFF. BASE RATE	REPL. COST NEW	AYB	EYB	ECON	FNCT		NORM	% COND
0900	01	3,528	110.3850	131.08	462,450	2006	2006	0	0	0	9.75	90.25

1 SNGL FAM – 0% - 0 Heated Area: 3090 HX Base Yr

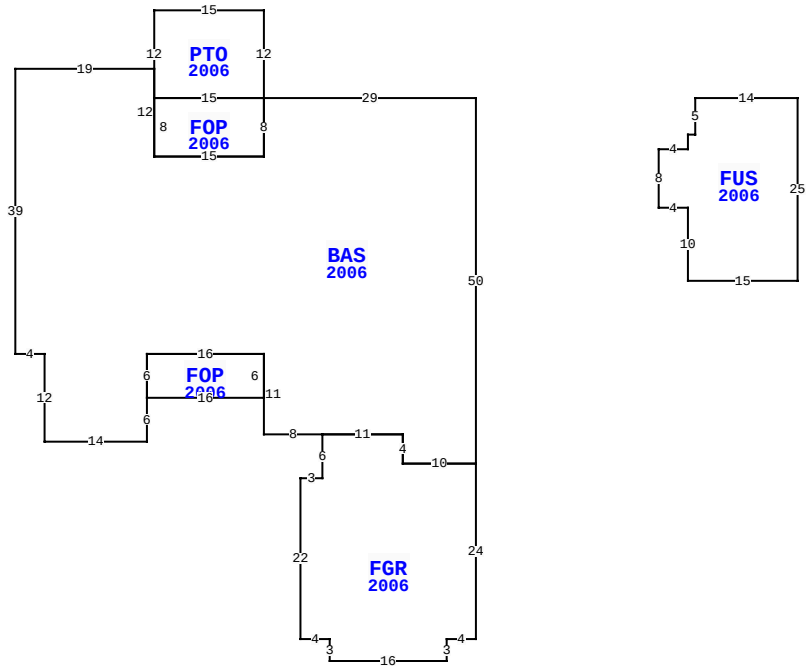

96007 HIDDEN MARSH LN, FERNANDINA BEACH

BLD DATE		LGL DATE	
XF DATE		LAND DATE	
INC DATE		AG DATE	

VALUATION SUMMARY

VALUATION BY	STANDARD
Tax Group: 4	Tax Dist:
BUILDING MARKET VALUE	417,361
TOTAL MARKET OB/XF VALUE	15,383
TOTAL LAND VALUE - MARKET	80,000
TOTAL MARKET VALUE	512,744
SOH/AGL Deduction	48,212
ASSESSED VALUE	464,532
TOTAL EXEMPTION VALUE	0
BASE TAXABLE VALUE	464,532
TOTAL JUST VALUE	512,744
NCON VALUE	0
INCOME VALUE	
PREVIOUS YEAR MKT VALUE	456,884

PERMIT NUM	DESCRIPTION	AMT	ISSUED
B1809700	8'H FENCE	8,000	09/24/2018
M11130	MECH OTHER	0	02/01/2006
E16637	ELEC OTHER	0	01/01/2006
P10538	OTHER	0	01/01/2006
C16576	CO ISSUED	230,000	11/01/2005
R08651	REPAIR/RRF	5,500	11/01/2005

SALES DATA

OFF RECORD Number	DATE	TYPE INST	Q U	V I	RSN CD	SALE PRICE
2205/1476	6/25/2018	WD	Q	I	01	450,000
GRANTOR: HALL JOSEPH B & HEATH						
GRANTEE: FLORIDA SOUTHERN LI						
1245/1806	7/15/2004	WD	Q	V		35,000
GRANTOR: HALL JEFFREY A						
GRANTEE: HALL JOSEPH B & HEA						

BUILDING NOTES

BUILDING DIMENSIONS

BAS=[YR=2006] W29 PTO=[YR=2006] N12 W15 S12 FOP=[YR=2006] S8 E15 N8 W15 $ E15 $ S8 W15 N12 W19 S39 E4 S12 E14 N6 FOP=[YR=2006] E16 N6 W16 S6 $ N6 E16 S11 E8 FGR=[YR=2006] S6 W3 S22 E4 S3 E16 N3 E4 N24 W10 N4 W11 $ E11 S4 E10 N50 $ PTR= E30 FUS=[YR=2006] E14 S25 W15 N10 W4 N8 E4 N2 E1 N5 $ W30 $.

EXTRA FEATURES

LN	OB/XF CODE	DESCRIPTION	BLD	CAP	L	W	UNITS	UT	Adj R	ADJ UNIT PRICE	ORIG COND	YEAR ON	YEAR ACTUAL	Q	% COND	OB/XF MKT VALUE	NOTES
1	0812	CONCRETE C	0	0	0	0	2,539.00	SF	4.00	4.00	100	2006	2006	3	88	8,937	
2	0500	FP-PRE FAB	0	0	0	0	1.00	UT	3,500.00	3,500.00	100	2006	2006	3	91	3,185	
3	1127	BRICK 8"	0	0	0	0	72.00	SF	11.00	11.00	100	2018	2018	3	99	2,352	
4	0461	IRON FENCE	0	0	6	0	36.00	SF	8.50	8.50	100	2019	2019	3	99	909	

LAND DESCRIPTION

TOTAL OB/XF 15,383

LN	USE CODE	CLS	LAND USE DESCRIPTION	CAP	RD	LOC ZONE	FRONT	DEPTH	TOT LND UTS	UNIT TYPE	DT	DPTH FACT	% COND	TOT ADJ	UNIT PRICE	ADJ UNIT PRICE	LAND VALUE	OTHER ADJUSTMENTS AND NOTES	YEAR	DENSITY	DECL	FRZ	YR	CONSRV
1	000100	C	SFR	0		RS-1	0.00	0.00	1.00	LT		1.00	1.00	1.00	80,000.00	80,000.00	80,000							

REVIEW DATE 12/21/2018 BY KW Total Acres: 0.00 Total Land Value: 80,000 Market: 0 Agricultural: 0 Common: 80,000 PRINTED 08/02/2023 BY SYS