LOT 25
IN OR 2486/229
THE COVE @ OYSTER BAY PB 6/79

MILLER LIVING TRUST/MILLER GEORGE J TRUSTEE
96071 PARK PLACE
FERNANDINA BEACH, FL 32034

2023

46-3N-28-5065-0025-0000

BUILDING CHARACTERISTICS

ELEMENT	CD	CONSTRUCTION
Exterior Wall	31	HARDIE BRD 100
Roof Structur	08	IRREGULAR 100
Roof Cover	12	MODULAR MT 100
Interior Wall	05	DRYWALL 100
Interior Floo	12	HARDWOOD 50
Interior Floo	14	CARPET 50
Air Condition	03	CENTRAL 100
Heating Type	04	AIR DUCTED 100
Bedrooms		3 100
Bathrooms		2.5 100
Frame	02	WOOD FRAME 100
Stories	2.	2. 100
Units		0 100
Occupancy	00	NONE 100
Quality	04	Quality Level 04
DOR CODE	0100	SINGLE FAMILY
MAP NUM		MKT AREA 04
NEIGHBORHOOD/LOC	4024.00	

AREA TYPE	TOTAL GROSS AREA	PCT OF BASE	TOT ADJ AREA	SUBAREA MARKET VALUE
BAL	197	15	30	4,437
BAS	1,423	100	1,423	210,450
FGR	484	55	266	39,339
FOP	210	30	63	9,317
FSP	197	40	79	11,683
FUS	1,276	100	1,276	188,709
STP	18	10	2	296
UOP	110	20	22	3,254
TOTALS	3,915		3,161	467,484

MARKET ADJUSTMENTS

TYPE	MDL	EFF. AREA	TOT ADJ PTS	EFF. BASE RATE	REPL. COST NEW	AYB	EYB	ECON	FNCT		NORM	% COND
0500	01	3,161	108.6750	154.86	489,512	2006	2012	0	0	0	4.50	95.50

1 SFR CUST - 100% - 2022 Heated Area: 2699 HX Base Yr 2022

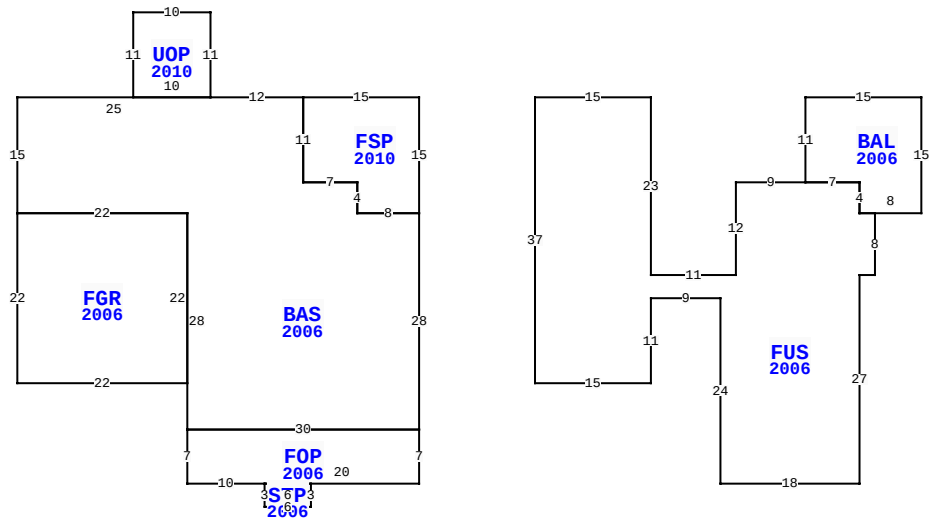

96071 PARK PL, FERNANDINA BEACH

BLD DATE		LGL DATE	
XF DATE		LAND DATE	06/07/2023 MLU
INC DATE		AG DATE	

NASSAU COUNTY PROPERTY

PAGE 1 of 1 4

VALUATION SUMMARY

VALUATION BY		STANDARD
Tax Group: 4	Tax Dist:	
BUILDING MARKET VALUE		467,484
TOTAL MARKET OB/XF VALUE		27,426
TOTAL LAND VALUE - MARKET		135,000
TOTAL MARKET VALUE		629,910
SOH/AGL Deduction		113,303
ASSESSED VALUE		516,607
TOTAL EXEMPTION VALUE	HX HB	50,000
BASE TAXABLE VALUE		466,607
TOTAL JUST VALUE		629,910
NCON VALUE		0
INCOME VALUE		
PREVIOUS YEAR MKT VALUE		501,560

PERMIT NUM	DESCRIPTION	AMT	ISSUED
B23434	ADDITION	3,747	03/01/2010
M10972	MECH OTHER	0	01/01/2006
R08742	REPAIR/RRF	10,000	12/01/2005
E15688	ELEC OTHER	3,000	09/01/2005
P09985	OTHER	0	09/01/2005
E15488	ELEC OTHER	0	08/01/2005

SALES DATA

OFF RECORD Number	DATE	TYPE INST	Q / U	V / I	RSN CD	SALE PRICE
2486/0229	8/09/2021	WD	Q	I	01	670,000
GRANTOR: BELL MICHAEL M & MELI						
GRANTEE: MILLER LIVING TRUST						
1501/0591	5/25/2007	WD	Q	I		419,000
GRANTOR: MOELLER BUILDERS INC						
GRANTEE: BELL MICHAEL M & ME						

BUILDING NOTES

BUILDING DIMENSIONS

FSP=[YR=2010] W15 BAS=[YR=2006] W12 UOP=[YR=2010] N11 W10 S11 E10 $ W25 S15 FGR=[YR=2006] S22 E22 N22 W22$ E22 S28 FOP=[YR=2006] S7 E10 STP=[YR=2006] S3 E6 N3 W6$ E20 N7 W30$ E30 N28 W8 N4 W7 N11$ S11 E7 S4 E8N15$ PTR=E15 FUS=[YR=2006] E15 S23 E11 N12 E9 BAL=[YR=2006] N11 E15 S15 W8 N4 W7$E7 S4 E2 S8 W2 S27 W18 N24 W9 S11 W15 N37$ W15$.

EXTRA FEATURES

LN	OB/XF CODE	DESCRIPTION	BLD	CAP	L	W	UNITS	UT	Adj R	ADJ UNIT PRICE	ORIG COND	YEAR ON	YEAR ACTUAL	Q	% COND	OB/XF MKT VALUE	NOTES
1	0810	CONCRETE A	0	100	0	0	195.00	SF	6.50	6.50	100	2006	2006	3	88	1,115	
2	0855	CONC PAVER	0	100	0	0	672.00	SF	10.00	10.00	100	2006	2006	3	88	5,914	
3	0500	FP-PRE FAB	0	100	0	0	1.00	UT	3,500.00	3,500.00	100	2006	2006	3	91	3,185	
4	0855	CONC PAVER	0	100	0	0	1,123.00	SF	10.00	10.00	100	2010	2010	3	92	10,332	
5	0504	FP-ELECTRI	0	100	0	0	1.00	UT	2,000.00	2,000.00	100	2010	2010	3	94	1,880	
6	0600	SUMMER KIT	0	100	0	0	1.00	UT	10,000.00	10,000.00	100	2010	2010	3	50	5,000	

LAND DESCRIPTION

TOTAL OB/XF 27,426

LN	USE CODE	CLS	LAND USE DESCRIPTION	CAP	RD	LOC ZONE	FRONT	DEPTH	TOT LND UTS	UNIT TYPE	DT	DPTH FACT	% COND	TOT ADJ	UNIT PRICE	ADJ UNIT PRICE	LAND VALUE	OTHER ADJUSTMENTS AND NOTES	YEAR	DENSITY	DECL	FRZ	YR	CONSRV
1	000133	C	SFR LAKE	100	0003	PUD	0.00	0.00	1.00	LT		1.00	1.00	1.00	135,000.00	135,000.00	135,000							

REVIEW DATE 05/04/2020 BY KWA Total Acres: 0.00 Total Land Value: 135,000 Market: 0 Agricultural: 0 Common: 135,000 PRINTED 08/02/2023 BY SYS