LOTS 10 & 11
THE COVE @ OYSTER BAY PB 6/79

SCHULTZ THEODORE J & DOROTHY E
96260 PARK PLACE
FERNANDINA BEACH, FL 32034

2023

46-3N-28-5065-0011-0000

BUILDING CHARACTERISTICS

ELEMENT	CD	CONSTRUCTION
Exterior Wall	31	HARDIE BRD 100
Roof Structur	08	IRREGULAR 100
Roof Cover	13	STAND SEAM 100
Interior Wall	05	DRYWALL 100
Interior Floo	11	CLAY TILE 70
Interior Floo	14	CARPET 30
Air Condition	03	CENTRAL 100
Heating Type	04	AIR DUCTED 100
Bedrooms		4 100
Bathrooms		3.5 100
Frame	02	WOOD FRAME 100
Stories	2.	2. 100
Units		0 100
Occupancy	00	NONE 100
Quality	05	Quality Level 05
DOR CODE	0100	SINGLE FAMILY
MAP NUM		MKT AREA 04
NEIGHBORHOOD/LOC	4024.00	

AREA TYPE	TOTAL GROSS AREA	PCT OF BASE	TOT ADJ AREA	SUBAREA MARKET VALUE
BAL	72	15	11	1,908
BAS	1,583	100	1,583	274,564
FGR	625	55	344	59,665
FGR	300	55	165	28,618
FOP	343	30	103	17,865
FOP	452	30	136	23,588
FST	156	55	86	14,916
FST	240	55	132	22,895
FUS	1,005	100	1,005	174,313
STP	24	10	2	347
TOTALS	4,800		3,567	618,679

MARKET ADJUSTMENTS

TYPE	MDL	EFF. AREA	TOT ADJ PTS	EFF. BASE RATE	REPL. COST NEW	AYB	EYB	ECON	FNCT		NORM	% COND
0500	01	3,567	128.7990	183.54	654,687	2006	2010	0	0	0	5.50	94.50

1 SFR CUST – 100% - 2015 Heated Area: 2588 HX Base Yr 2015

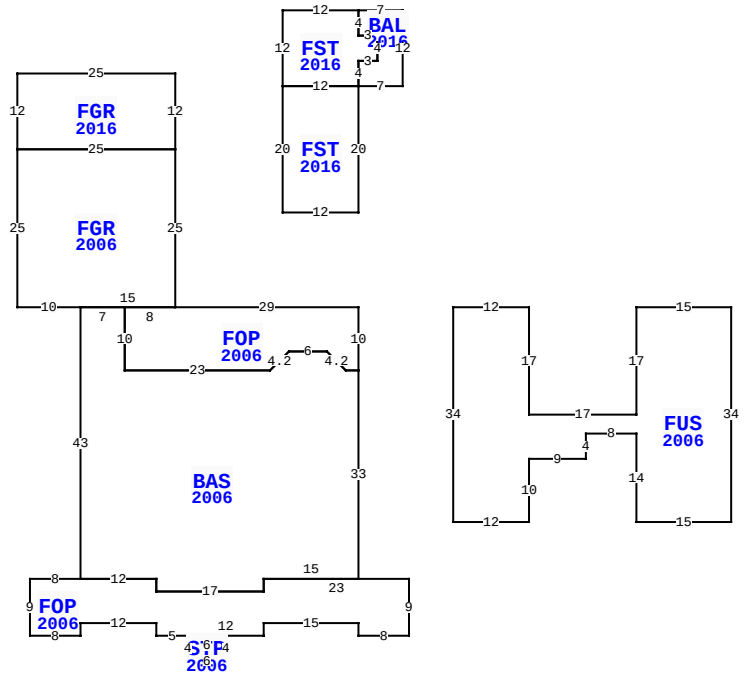

96260 PARK PL, FERNANDINA BEACH

BLD DATE		LGL DATE	
XF DATE		LAND DATE	06/07/2023 MLU
INC DATE		AG DATE	

NASSAU COUNTY PROPERTY

PAGE 1 of 1 4

VALUATION SUMMARY

VALUATION BY		STANDARD
Tax Group: 4	Tax Dist:	
BUILDING MARKET VALUE		618,679
TOTAL MARKET OB/XF VALUE		13,887
TOTAL LAND VALUE - MARKET		270,000
TOTAL MARKET VALUE		902,566
SOH/AGL Deduction		429,282
ASSESSED VALUE		473,284
TOTAL EXEMPTION VALUE	HX HB	50,000
BASE TAXABLE VALUE		423,284
TOTAL JUST VALUE		902,566
NCON VALUE		0
INCOME VALUE		
PREVIOUS YEAR MKT VALUE		614,679

PERMIT NUM	DESCRIPTION	AMT	ISSUED
B2011100	(10) WINDOWS	22,541	11/13/2020
B1803702	(2) WINDOWS	7,067	05/01/2018
B1631838	GARAGE	25,574	02/01/2016
M0509669	H/AC	0	05/01/2005
C13539	CO ISSUED	0	12/01/2004
B13539	NEW CONSTR	0	12/01/2004

SALES DATA

OFF RECORD Number	DATE	TYPE INST	Q / U	V / I	RSN CD	SALE PRICE
2563/1858	5/18/2022	WD	U	V	37	95,000
GRANTOR: GARBER VAN LAWRENCE &						
GRANTEE: SCHULTZ THEODORE J						
1860/1270	6/05/2013	WD	Q	I	01	359,500
GRANTOR: GOODMAN LARRY S						
GRANTEE: SCHULTZ THEODORE J						

BUILDING NOTES

EXTRA FEATURES

L N	OB/XF CODE	DESCRIPTION	BLD	CAP	L	W	UNITS	UT	Adj R	ADJ UNIT PRICE	ORIG COND	YEAR ON	YEAR ACTUAL	Q	% COND	OB/XF MKT VALUE	NOTES
1	0812	CONCRETE C	0	100	0	0	2,082.00	SF	4.00	4.00	100	2006	2006	3	88	7,329	
2	0504	FP-ELECTRI	0	100	0	0	1.00	UT	2,000.00	2,000.00	100	2006	2006	3	91	1,820	
3	0810	CONCRETE A	0	100	14	8	112.00	SF	6.50	6.50	100	2016	2016	3	97	706	
4	0462	ST/AL FNC	0	100	120	0	480.00	SF	10.00	10.00	100	2016	2016	3	84	4,032	

BUILDING DIMENSIONS

FOP=[YR=2006] W29 FGR=[YR=2006] N25 FGR=[YR=2016] N12 W25 S12 E25$ W25 S25 E10 BAS=[YR=2006] S43 FOP=[YR=2006] W8 S9 E8 N2 E12 S2 E5 STP=[YR=2006] S4 E6 N4 W6$ E12 N2 E15 S2 E8 N9 W23 S2 W17 N2 W12$ E12 S2 E17 N2 E15 N33 W2 U3 L3 W6 D3 L3 W23 N10 W7$ E15$ W8 S10 E23 U3 R3 E6 D3 R3 E2 N10$ PTR= E15 FUS=[YR=2006] E12 S17 E17 N17 E15 S34 W15 N14 W8 S4 W9 S10 W12 N34$ W15$ PTR= N15 FST=[YR=2016] W12 N20 FST=[YR=2016] N12 E12 BAL=[YR=2016] E7 S12 W7 N4 E3 N4 W3 N4$ S4 E3 S4 W3 S4 W12$ E12 S20$ S15$.

LAND DESCRIPTION

TOTAL OB/XF 13,887

L N	USE CODE	CLS	LAND USE DESCRIPTION	CAP	R D	LOC ZONE	FRONT	DEPTH	TOT LND UTS	UNIT TYPE	D T	DPTH FACT	% COND	TOT ADJ	UNIT PRICE	ADJ UNIT PRICE	LAND VALUE	OTHER ADJUSTMENTS AND NOTES	YEAR	DENSITY	DECL	FRZ	YR	CONSRV
1	000133	C	SFR LAKE	100		PUD	0.00	0.00	1.00	LT		1.00	1.00	1.00	135,000.00	135,000.00	135,000							
2	000133	C	SFR LAKE	100		PUD	0.00	0.00	1.00	LT		1.00	1.00	1.00	135,000.00	135,000.00	135,000							

REVIEW DATE 11/07/2022 BY DJA Total Acres: 0.00 Total Land Value: 270,000 Market: 0 Agricultural: 0 Common: 270,000 PRINTED 08/02/2023 BY SYS