LOT 9
THE COVE @ OYSTER BAY PB 6/79

GARBER VAN L & ANN S
96218 PARK PL
FERNANDINA BEACH, FL 32034

2023

46-3N-28-5065-0009-0000

NASSAU COUNTY PROPERTY

BUILDING CHARACTERISTICS

ELEMENT	CD	CONSTRUCTION
Exterior Wall	31	HARDIE BRD 90
Exterior Wall	14	WD SHINGLE 10
Roof Structur	08	IRREGULAR 100
Roof Cover	13	STAND SEAM 100
Interior Wall	05	DRYWALL 100
Interior Floo	11	CLAY TILE 80
Interior Floo	12	HARDWOOD 20
Air Condition	03	CENTRAL 100
Heating Type	04	AIR DUCTED 100
Bedrooms		5 100
Bathrooms		5.5 100
Frame	02	WOOD FRAME 100
Stories	2.	2. 100
Units		0 100
Occupancy	00	NONE 100
Quality	05	Quality Level 05
DOR CODE	0100	SINGLE FAMILY
MAP NUM		MKT AREA 04
NEIGHBORHOOD/LOC	4024.00	

AREA TYPE	TOTAL GROSS AREA	PCT OF BASE	TOT ADJ AREA	SUBAREA MARKET VALUE
BAS	2,130	100	2,130	370,876
FGR	612	55	337	58,679
FOP	296	30	89	15,496
FSP	240	40	96	16,716
FST	44	55	24	4,179
FUS	521	100	521	90,717
FUS	727	100	727	126,585
PTO	48	5	2	349
PTO	168	5	8	1,393
UST	60	45	27	4,701
TOTALS	4,846		3,961	689,691

MARKET ADJUSTMENTS

TYPE	MDL	EFF. AREA	TOT ADJ PTS	EFF. BASE RATE	REPL. COST NEW	AYB	EYB	ECON	FNCT		NORM	% COND
0500	01	3,961	132.1650	188.34	746,015	2006	2006	0	0	0	7.55	92.45

1 SFR CUST – 100% - 2020 Heated Area: 3378 HX Base Yr 2020

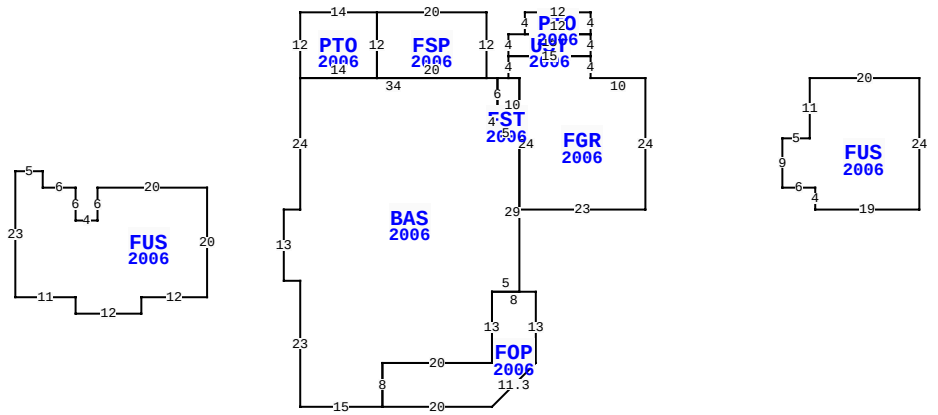

96218 PARK PL, FERNANDINA BEACH

BLD DATE		LGL DATE	
XF DATE		LAND DATE	06/07/2023 MLU
INC DATE		AG DATE	

NASSAU COUNTY PROPERTY — VALUATION SUMMARY

VALUATION BY		STANDARD
Tax Group: 4	Tax Dist:	
BUILDING MARKET VALUE		689,691
TOTAL MARKET OB/XF VALUE		9,925
TOTAL LAND VALUE - MARKET		135,000
TOTAL MARKET VALUE		834,616
SOH/AGL Deduction		363,435
ASSESSED VALUE		471,181
TOTAL EXEMPTION VALUE	HX HB	50,000
BASE TAXABLE VALUE		421,181
TOTAL JUST VALUE		834,616
NCON VALUE		0
INCOME VALUE		
PREVIOUS YEAR MKT VALUE		670,275

PERMIT NUM	DESCRIPTION	AMT	ISSUED
M10732	TANKS/BLRS	0	12/01/2005
C15523	CO ISSUED	300,000	07/01/2005
E15406	ELEC OTHER	5,000	07/01/2005
R07848	REPAIR/RRF	12,000	07/01/2005
B15523	NEW CONSTR	300,000	07/01/2005
P09726	OTHER	0	07/01/2005

SALES DATA

OFF RECORD Number	DATE	TYPE INST	Q / U	V / I	RSN CD	SALE PRICE
2305/1775	9/20/2019	WD	Q	V	03	90,000
GRANTOR: SCHULTZ THEODORE J &						
GRANTEE: GARBER VAN LAWRENCE						
2290/1150	7/09/2019	WD	Q	I	03	636,800
GRANTOR: MOYES BRETT D & TAMMY						
GRANTEE: GARBER VAN L & ANN						

BUILDING NOTES

BUILDING DIMENSIONS

FGR=[YR=2006] W10 N4 UST=[YR=2006] N4 PTO=[YR=2006] N4W12 S4 E12$ W15 S4 E15$ W15 S4 FST=[YR=2006] W2 BAS=[YR=2006] W2 FSP=[YR=2006] N12 W20 PTO=[YR=2006] W14 S12 E14 N12$ S12 E20$ W34 S24 W3 S13 E3 S23 E15 FOP=[YR=2006] E20 U8 R8 N13 W8 S13 W20 S8$ N8 E20 N13 E5 N29 W5 N4 E1 N6$ S6 W1 S4 E5 N10W2$ E2 S24 E23 N24$ PTR=W80 S20 FUS=[YR=2006] W20 S6 W4 N6 W6 N3 W5 S23 E11 S3 E12 N3 E12 N20$ N20 E80 $ PTR=E30 FUS=[YR=2006] E20 S24 W19 N4 W6 N9 E5 N11$ W30$.

EXTRA FEATURES

LN	OB/XF CODE	DESCRIPTION	BLD	CAP	L	W	UNITS	UT	Adj R	ADJ UNIT PRICE	ORIG COND	YEAR ON	YEAR ACTUAL	Q	% COND	OB/XF MKT VALUE	NOTES
1	0811	CONCRETE B	0	100	0	0	896.00	SF	5.20	5.20	100	2006	2006	3	88	4,100	
2	0500	FP-PRE FAB	0	100	0	0	1.00	UT	3,500.00	3,500.00	100	2006	2006	3	91	3,185	
3	0462	ST/AL FNC	0	100	115	0	460.00	SF	10.00	10.00	100	2006	2006	3	48	2,208	
4	0463	FENCE GATE	0	100	0	0	2.00	UT	300.00	300.00	100	2006	2006	3	72	432	

LAND DESCRIPTION

TOTAL OB/XF 9,925

LN	USE CODE	CLS	LAND USE DESCRIPTION	CAP	RD	LOC ZONE	FRONT	DEPTH	TOT LND UTS	UNIT TYPE	DT	DPTH FACT	% COND	TOT ADJ	UNIT PRICE	ADJ UNIT PRICE	LAND VALUE	OTHER ADJUSTMENTS AND NOTES	YEAR	DENSITY	DECL	FRZ	YR	CONSRV
1	000133	C	SFR LAKE	100		PUD	0.00	0.00	1.00	LT		1.00	1.00	1.00	135,000.00	135,000.00	135,000							

REVIEW DATE 06/15/2022 BY KWA Total Acres: 0.00 Total Land Value: 135,000 Market: 0 Agricultural: 0 Common: 135,000 PRINTED 08/02/2023 BY SYS