LOT 8
IN OR 2114/768
THE COVE @ OYSTER BAY PB 6/79

WHITE DEBORAH A & DENNIS R
96200 PARK PLACE
FERNANDINA BEACH, FL 32034

2023

46-3N-28-5065-0008-0000

BUILDING CHARACTERISTICS

ELEMENT	CD	CONSTRUCTION
Exterior Wall	31	HARDIE BRD 100
Roof Structur	08	IRREGULAR 100
Roof Cover	13	STAND SEAM 100
Interior Wall	05	DRYWALL 100
Interior Floo	12	HARDWOOD 60
Interior Floo	14	CARPET 40
Air Condition	03	CENTRAL 100
Heating Type	04	AIR DUCTED 100
Bedrooms		4 100
Bathrooms		3 100
Frame	02	WOOD FRAME 100
Stories	2.	2. 100
Units		0 100
Occupancy	00	NONE 100
Quality	05	Quality Level 05
DOR CODE	0100	SINGLE FAMILY
MAP NUM		MKT AREA 04
NEIGHBORHOOD/LOC	4024.00	

AREA TYPE	TOTAL GROSS AREA	PCT OF BASE	TOT ADJ AREA	SUBAREA MARKET VALUE
BAS	1,970	100	1,970	341,403
FGR	640	55	352	61,002
FOP	171	30	51	8,838
FOP	403	30	121	20,970
FUS	782	100	782	135,521
SFB	100	80	80	13,864
STR	18	10	2	347
STR	36	10	4	693
STR	84	10	8	1,387
TOTALS	4,204		3,370	584,024

MARKET ADJUSTMENTS

TYPE	MDL	EFF. AREA	TOT ADJ PTS	EFF. BASE RATE	REPL. COST NEW	AYB	EYB	ECON	FNCT		NORM	% COND
0500	01	3,370	123.4640	175.94	592,918	2018	2018	0	0	0	1.50	98.50

1 SFR CUST - 100% - 2019 Heated Area: 2832 HX Base Yr 2019

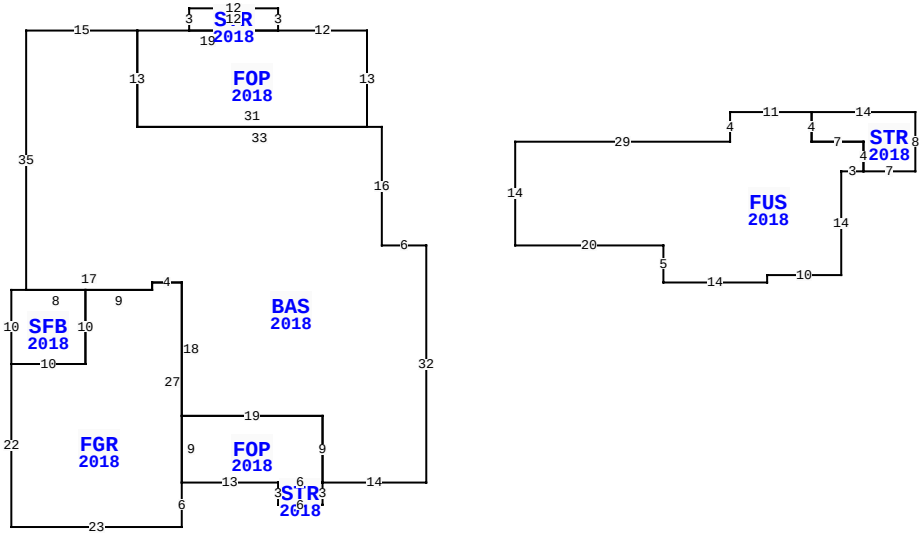

96200 PARK PL, FERNANDINA BEACH

BLD DATE		LGL DATE	
XF DATE		LAND DATE	06/07/2023 MLU
INC DATE		AG DATE	

NASSAU COUNTY PROPERTY

PAGE 1 of 1 4

VALUATION SUMMARY

VALUATION BY		STANDARD
Tax Group: 4	Tax Dist:	
BUILDING MARKET VALUE		584,024
TOTAL MARKET OB/XF VALUE		10,795
TOTAL LAND VALUE - MARKET		135,000
TOTAL MARKET VALUE		729,819
SOH/AGL Deduction		471,926
ASSESSED VALUE		257,893
TOTAL EXEMPTION VALUE	HX HB	50,000
BASE TAXABLE VALUE		207,893
TOTAL JUST VALUE		729,819
NCON VALUE		0
INCOME VALUE		
PREVIOUS YEAR MKT VALUE		586,008

PERMIT NUM	DESCRIPTION	AMT	ISSUED
B1802483	CO ISSUED	0	12/19/2018
B1802438	NEW CONSTR	371,478	03/08/2018

SALES DATA

OFF RECORD Number	DATE	TYPE INST	Q / U	V / I	RSN CD	SALE PRICE
2114/0768	4/12/2017	WD	Q	V	01	69,900
GRANTOR: HORNER ALBERT L JR &						
GRANTEE: WHITE DEBORAH A & D						
2046/1965	5/02/2016	SW	U	V	12	37,000
GRANTOR: BANK OF AMERICA N A						
GRANTEE: HORNER ALBERT LEON						

BUILDING NOTES

BUILDING DIMENSIONS

FOP=[YR=2018] W12 STR=[YR=2018] N3 W12 S3 E12$ W19 BAS=[YR=2018] W15 S35 SFB=[YR=2018] W2 S10 FGR=[YR=2018] S22 E23 N6 FOP=[YR=2018] E13 STR=[YR=2018] S3 E6 N3 W6$ E6 N9 W19 S9$ N27 W4 S1 W9 S10 W10$ E10 N10 W8$ E17 N1 E4 S18 E19 S9 E14 N32 W6 N16 W33 N13$ S13 E31 N13$ PTR= E20 S15 FUS=[YR=2018] E29 N4 E11 STR=[YR=2018] E14 S8 W7 N4 W7 N4$ S4 E7 S4 W3 S14 W10 S1 W14 N5 W20 N14$ N15 W20$.

EXTRA FEATURES

LN	OB/XF CODE	DESCRIPTION	BLD	CAP	L	W	UNITS	UT	Adj R	ADJ UNIT PRICE	ORIG COND	YEAR ON	YEAR ACTUAL	Q	% COND	OB/XF MKT VALUE	NOTES
1	0500	FP-PRE FAB	0	100	0	0	1.00	UT	3,500.00	3,500.00	100	2018	2018	3	99	3,465	
2	0855	CONC PAVER	0	100	32	4	128.00	SF	10.00	10.00	100	2018	2018	3	98	1,254	
3	0855	CONC PAVER	0	100	31	20	620.00	SF	10.00	10.00	100	2018	2018	3	98	6,076	

LAND DESCRIPTION

TOTAL OB/XF 10,795

LN	USE CODE	CLS	LAND USE DESCRIPTION	CAP	RD	LOC ZONE	FRONT	DEPTH	TOT LND UTS	UNIT TYPE	DT	DPTH FACT	% COND	TOT ADJ	UNIT PRICE	ADJ UNIT PRICE	LAND VALUE	OTHER ADJUSTMENTS AND NOTES	YEAR	DENSITY	DECL	FRZ	YR	CONSRV
1	000133	C	SFR LAKE	100		PUD	0.00	0.00	1.00	LT		1.00	1.00	1.00	135,000.00	135,000.00	135,000							

REVIEW DATE 12/27/2018 BY KW Total Acres: 0.00 Total Land Value: 135,000 Market: 0 Agricultural: 0 Common: 135,000 PRINTED 08/02/2023 BY SYS