IN OR 1720/995

KIRIN KEVIN M
260 RICHARDS RD
MELBOURNE BEACH, FL 32951

2023

46-3N-28-0000-0006-0040

BUILDING CHARACTERISTICS

ELEMENT	CD	CONSTRUCTION
Exterior Wall	12	CEDAR 100
Roof Structur	03	GABLE/HIP 100
Roof Cover	12	MODULAR MT 100
Interior Wall	05	DRYWALL 100
Interior Floo	13	LVT/LAMNT 100
Air Condition	03	CENTRAL 100
Heating Type	04	AIR DUCTED 100
Bedrooms		2 100
Bathrooms		2 100
Frame	02	WOOD FRAME 100
Stories	2.	2. 100
Units		0 100
BUD8 Adjustme	04	DIST 01 100
Occupancy	00	NONE 100
Quality	02	Quality Level 02

DOR CODE 0100 SINGLE FAMILY

MAP NUM | MKT AREA 04

NEIGHBORHOOD/LOC 4020.00

AREA TYPE	TOTAL GROSS AREA	PCT OF BASE	TOT ADJ AREA	SUBAREA MARKET VALUE
BAS	1,570	100	1,570	174,170
FCP	1,345	25	336	37,275
FOP	99	30	30	3,329
FSP	256	40	102	11,316
FST	196	55	108	11,981
FST	140	55	77	8,542
TOTALS	3,606		2,223	246,612

MARKET ADJUSTMENTS

TYPE	MDL	EFF. AREA	TOT ADJ PTS	EFF. BASE RATE	REPL. COST NEW	AYB	EYB	ECON	FNCT		NORM	% COND
0900	01	2,223	107.9960	128.25	285,100	1988	1995	0	0	0	13.50	86.50

1 SNGL FAM – 0% - 0 Heated Area: 1570 HX Base Yr

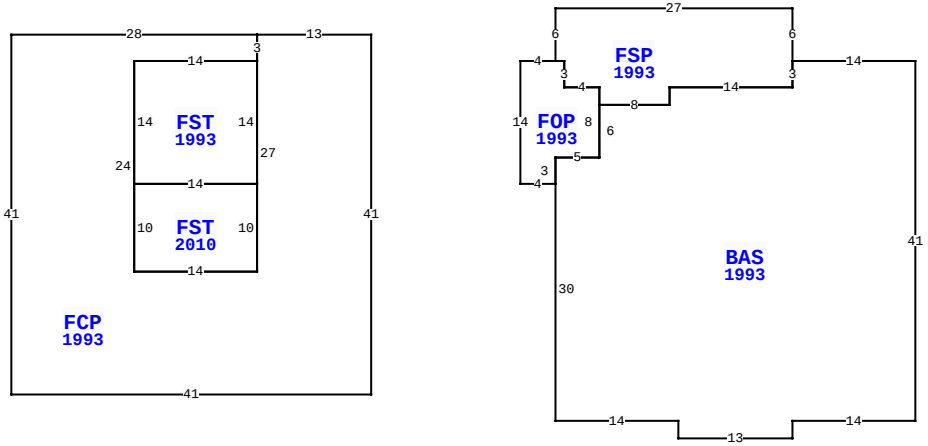

BLD DATE | LGL DATE
XF DATE | LAND DATE 06/05/2023 MLU
INC DATE | AG DATE

96095 OSPREY POINT LN, FERNANDINA BEACH

NASSAU COUNTY PROPERTY

PAGE 1 of 1 4

VALUATION SUMMARY

VALUATION BY	STANDARD
Tax Group: 4	Tax Dist:
BUILDING MARKET VALUE	246,612
TOTAL MARKET OB/XF VALUE	2,780
TOTAL LAND VALUE - MARKET	80,000
TOTAL MARKET VALUE	329,392
SOH/AGL Deduction	64,297
ASSESSED VALUE	265,095
TOTAL EXEMPTION VALUE	0
BASE TAXABLE VALUE	265,095
TOTAL JUST VALUE	329,392
NCON VALUE	0
INCOME VALUE	
PREVIOUS YEAR MKT VALUE	263,559

PERMIT NUM	DESCRIPTION	AMT	ISSUED
4152	NEW CONSTR	44,825	06/08/1987
2172	H/AC	4,000	06/08/1987
4274	NEW CONSTR	4,400	06/08/1987

SALES DATA

OFF RECORD Number	DATE	TYPE INST	Q U	V I	RSN CD	SALE PRICE
1720/0995	1/08/2011	QC	U	I	11	100
GRANTOR: KIRIN KEVIN M & ALEXA						
GRANTEE: KIRIN KEVIN M						
1018/0552	11/06/2001	WD	Q	I		195,000
GRANTOR: BRAKE SHANNON S						
GRANTEE: KIRIN KEVIN & ALEXA						

BUILDING NOTES

BUILDING DIMENSIONS

FST=[YR=1993] W14 S14 FST=[YR=2010] S10 E14 N10 W14$ E14 N14$ FCP=[YR=1993] N3 W28 S41 E41 N41 W13 S27 W14 N24 E14 $ PTR= E30FOP=[YR=1993] E4 FSP=[YR=1993] N6 E27 S6BAS=[YR=1993] E14 S41 W14 S2 W13 N2W14 N30 E5 N6 E8 N2 E14 N3 $ S3 W14 S2 W8 N2 W4 N3 W1 $ E1 S3 E4 S8 W5 S3 W4 N14 $ W30 $.

EXTRA FEATURES

LN	OB/XF CODE	DESCRIPTION	BLD	CAP	L	W	UNITS	UT	Adj R	ADJ UNIT PRICE	ORIG COND	YEAR ON	YEAR ACTUAL	Q	% COND	OB/XF MKT VALUE	NOTES
1	0500	FP-PRE FAB	0	0	0	0	1.00	UT	3,500.00	3,500.00	100	1988	1988	3	66	2,310	
2	0810	CONCRETE A	0	0	14	6	84.00	SF	6.50	6.50	100	2004	2004	3	86	470	

LAND DESCRIPTION

TOTAL OB/XF 2,780

LN	USE CODE	CLS	LAND USE DESCRIPTION	CAP	RD	LOC ZONE	FRONT	DEPTH	TOT LND UTS	UNIT TYPE	DT	DPTH FACT	% COND	TOT ADJ	UNIT PRICE	ADJ UNIT PRICE	LAND VALUE	OTHER ADJUSTMENTS AND NOTES	YEAR	DENSITY	DECL	FRZ	YR	CONSRV
1	000115	C	SFR ACRES	0		RS-1	259.00	168.00	1.00	AC		1.00	1.00	1.00	80,000.00	80,000.00	80,000							

REVIEW DATE 04/11/2022 BY KW Total Acres: 1.00 Total Land Value: 80,000 Market: 0 Agricultural: 0 Common: 80,000 PRINTED 08/02/2023 BY SYS