BLOCK 14 LOT 13
IN OR 1123/23
CONSERV ESMT PT OR 929/824

NOBLES JOHN & AMIE
55105 BEAR RUN RD
CALLAHAN, FL 32034

2023

46-2N-25-197D-0014-0130

NASSAU COUNTY PROPERTY

BUILDING CHARACTERISTICS

ELEMENT	CD	CONSTRUCTION
Exterior Wall	20	FACE BRICK 100
Roof Structur	03	GABLE/HIP 100
Roof Cover	03	COMP SHNGL 100
Interior Wall	05	DRYWALL 100
Interior Floo	14	CARPET 60
Interior Floo	11	CLAY TILE 40
Air Condition	03	CENTRAL 100
Heating Type	04	AIR DUCTED 100
Bedrooms		3 100
Bathrooms		3 100
Frame	02	WOOD FRAME 100
Stories	2.	2. 100
Units		0 100
Occupancy	00	NONE 100
Quality	03	Quality Level 03
DOR CODE	0100	SINGLE FAMILY
MAP NUM		MKT AREA 08
NEIGHBORHOOD/LOC	8010.00	

AREA TYPE	TOTAL GROSS AREA	PCT OF BASE	TOT ADJ AREA	SUBAREA MARKET VALUE
BAS	2,162	100	2,162	237,415
FDG	1,116	60	670	73,574
FGR	576	55	317	34,811
FOP	84	30	25	2,746
FSP	599	40	240	26,355
TOTALS	4,537		3,414	374,901

MARKET ADJUSTMENTS

TYPE	MDL	EFF. AREA	TOT ADJ PTS	EFF. BASE RATE	REPL. COST NEW	AYB	EYB	ECON	FNCT		NORM	% COND
0900	01	3,414	105.9840	125.86	429,686	2005	2005	0	0	0	12.75	87.25

1 SNGL FAM – 100% - 2006 Heated Area: 2162 HX Base Yr 2006

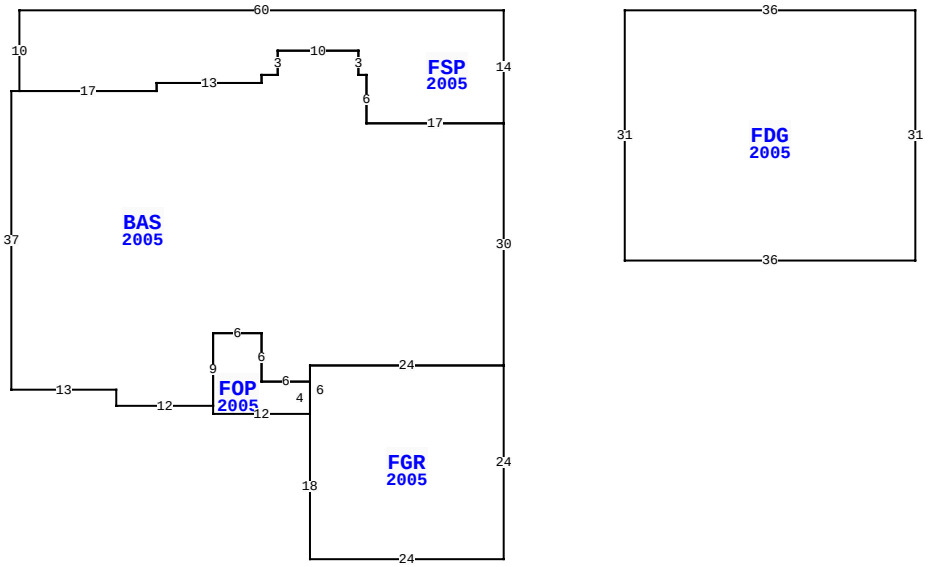

55105 BEAR RUN RD, CALLAHAN

BLD DATE		LGL DATE	
XF DATE		LAND DATE	
INC DATE		AG DATE	

VALUATION SUMMARY

VALUATION BY		STANDARD
Tax Group: 6	Tax Dist:	
BUILDING MARKET VALUE		374,901
TOTAL MARKET OB/XF VALUE		14,402
TOTAL LAND VALUE - MARKET		50,000
TOTAL MARKET VALUE		439,303
SOH/AGL Deduction		216,670
ASSESSED VALUE		222,633
TOTAL EXEMPTION VALUE	HX HB	50,000
BASE TAXABLE VALUE		172,633
TOTAL JUST VALUE		439,303
NCON VALUE		0
INCOME VALUE		
PREVIOUS YEAR MKT VALUE		341,993

PERMIT NUM	DESCRIPTION	AMT	ISSUED
M0409098	H/AC	0	12/01/2004
B13585	GARAGE	36,135	10/01/2004
B13586	NEW CONSTR	185,000	10/01/2004
R6634	REPAIR/RRF	5,000	10/01/2004
R6635	REPAIR/RRF	1,000	10/01/2004

SALES DATA

OFF RECORD Number	DATE	TYPE INST	Q / U	V / I	RSN CD	SALE PRICE
1123/0023	3/20/2003	WD	Q	V		28,800
GRANTOR: BKS INC						
GRANTEE: NOBLES JOHN & AMIE						
0929/0852	4/24/2000	WD	U	V	09	1,546,300
GRANTOR: SPRING LAKE ESTATES O						
GRANTEE: BKS INC						

BUILDING NOTES

BUILDING DIMENSIONS

FSP=[YR=2005] W60 S10 BAS=[YR=2005] W1 S37 E13 S2 E12
FOP=[YR=2005] S1 E12 FGR=[YR=2005] S18 E24 N24 W24S6 $ N4
W6 N6 W6 S9 $ N9 E6 S6 E6 N2 E24 N30 W17 N6 W1 N3 W10 S3 W2
S1 W13 S1 W17 $ E17 N1 E13 N1 E2 N3 E10 S3 E1 S6 E17 N14 $
PTR= E15 FDG=[YR=2005] E36 S31 W36 N31 $ W15$.

EXTRA FEATURES

LN	OB/XF CODE	DESCRIPTION	BLD	CAP	L	W	UNITS	UT	Adj R	ADJ UNIT PRICE	ORIG COND	YEAR ON	YEAR ACTUAL	Q	% COND	OB/XF MKT VALUE	NOTES
1	0500	FP-PRE FAB	0	100	0	0	1.00	UT	3,500.00	3,500.00	100	2005	2005	3	90	3,150	
2	1127	BRICK 8"	0	100	9	4	36.00	SF	11.00	11.00	100	2005	2005	3	96	380	
3	0812	CONCRETE C	0	100	0	0	3,124.00	SF	4.00	4.00	100	2005	2005	3	87	10,872	

LAND DESCRIPTION

TOTAL OB/XF 14,402

LN	USE CODE	CLS	LAND USE DESCRIPTION	CAP	RD	LOC ZONE	FRONT	DEPTH	TOT LND UTS	UNIT TYPE	DT	DPTH FACT	% COND	TOT ADJ	UNIT PRICE	ADJ UNIT PRICE	LAND VALUE	OTHER ADJUSTMENTS AND NOTES	YEAR	DENSITY	DECL	FRZ	YR	CONSRV
1	000100	C	SFR	100	0006		0.00	0.00	1.00	LT		1.00	1.00	1.00	50,000.00	50,000.00	50,000							

REVIEW DATE 02/23/2017 BY KBX Total Acres: 0.00 Total Land Value: 50,000 Market: 0 Agricultural: 0 Common: 50,000 PRINTED 08/02/2023 BY SYS