BLOCK 13 LOT 36
SPRING LAKE EST 4 REPLAT
PB 6/177 FKA BLK 13 LOT 39

KING RAY E & CHARLIE JEAN L/E/
55747 BEAR RUN ROAD
CALLAHAN, FL 32011

2023

46-2N-25-197D-0013-0360

NASSAU COUNTY PROPERTY

BUILDING CHARACTERISTICS

ELEMENT	CD	CONSTRUCTION
Exterior Wall	30	VINYL 100
Roof Structur	03	GABLE/HIP 100
Roof Cover	03	COMP SHNGL 100
Interior Wall	05	DRYWALL 100
Interior Floo	14	CARPET 80
Interior Floo	08	SHT VINYL 20
Air Condition	03	CENTRAL 100
Heating Type	04	AIR DUCTED 100
Bedrooms		3 100
Bathrooms		3 100
Frame	02	WOOD FRAME 100
Stories	1.5	1.5 100
Units		0 100
Occupancy	00	NONE 100
Quality	03	Quality Level 03
DOR CODE	0100	SINGLE FAMILY
MAP NUM		MKT AREA 08
NEIGHBORHOOD/LOC	8010.00	

AREA TYPE	TOTAL GROSS AREA	PCT OF BASE	TOT ADJ AREA	SUBAREA MARKET VALUE
BAS	2,126	100	2,126	243,769
FGR	440	55	242	27,748
FOP	192	30	58	6,651
FSP	160	40	64	7,339
FUS	252	100	252	28,895
TOTALS	3,170		2,742	314,401

MARKET ADJUSTMENTS

TYPE	MDL	EFF. AREA	TOT ADJ PTS	EFF. BASE RATE	REPL. COST NEW	AYB	EYB	ECON	FNCT		NORM	% COND
0900	01	2,742	102.7200	121.98	334,469	2004	2009	0	0	0	6.00	94.00

1 SNGL FAM – 100% - 2005 Heated Area: 2378 HX Base Yr 2005

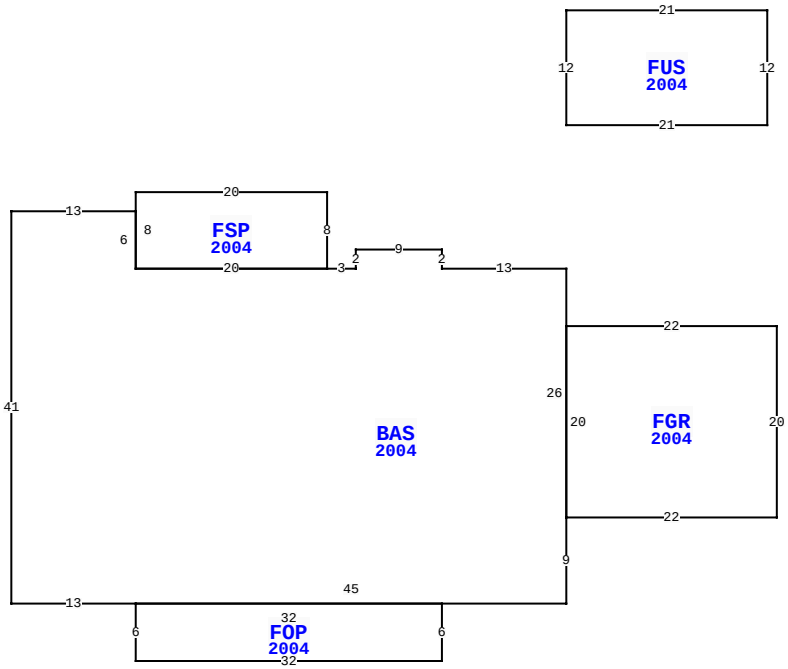

55747 BEAR RUN RD, CALLAHAN

BLD DATE		LGL DATE	
XF DATE		LAND DATE	
INC DATE		AG DATE	

VALUATION SUMMARY

VALUATION BY		STANDARD
Tax Group: 6	Tax Dist:	
BUILDING MARKET VALUE		325,864
TOTAL MARKET OB/XF VALUE		27,052
TOTAL LAND VALUE - MARKET		50,000
TOTAL MARKET VALUE		402,916
SOH/AGL Deduction		195,624
ASSESSED VALUE		207,292
TOTAL EXEMPTION VALUE	HX HB	50,000
BASE TAXABLE VALUE		157,292
TOTAL JUST VALUE		402,916
NCON VALUE		0
INCOME VALUE		
PREVIOUS YEAR MKT VALUE		328,300

PERMIT NUM	DESCRIPTION	AMT	ISSUED
21005568	REPAIR/RRF	21,000	05/03/2021
B20399	SWIM POOL	24,800	08/01/2007
B13859	GARAGE	28,512	10/01/2004
M7674	H/AC	0	12/04/2003
E11911	NEW CONSTR	5,334	10/01/2003
111726	NEW CONSTR	171,560	09/01/2003

SALES DATA

OFF RECORD Number	DATE	TYPE INST	Q U	V I	RSN CD	SALE PRICE
2441/0231	3/03/2021	LE	U	I	11	100
GRANTOR: KING RAY E & CHARLIE						
GRANTEE: MURPHY RAEANNE						
1123/0024	3/20/2003	WD	Q	V		28,800
GRANTOR: BKS INC						
GRANTEE: KING RAY E & CHARLI						

BUILDING NOTES

BUILDING DIMENSIONS

BAS=[YR=2004] W13 N2 W9 S2 W3 FSP=[YR=2004] N8 W20 S8 E20 $ W20 N6 W13 S41 E13 FOP=[YR=2004] S6 E32 N6 W32$ E45 N9 FGR=[YR=2004] E22 N20 W22 S20$ N26$ PTR=N15 FUS=[YR=2004] N12 E21 S12 W21$ S15$.

EXTRA FEATURES

LN	OB/XF CODE	DESCRIPTION	BLD	CAP	L	W	UNITS	UT	Adj R	ADJ UNIT PRICE	ORIG COND	YEAR ON	YEAR ACTUAL	Q	% COND	OB/XF MKT VALUE	NOTES
1	0500	FP-PRE FAB	0	100	0	0	1.00	UT	3,500.00	3,500.00	100	2004	2004	3	89	3,115	
2	0812	CONCRETE C	0	100	0	0	2,283.00	SF	4.00	4.00	100	2004	2004	3	86	7,854	
3	0866	POOL FIBER	0	100	0	0	314.00	SF	72.00	72.00	100	2007	2007	3	35	7,913	
4	0855	CONC PAVER	0	100	0	0	918.00	SF	10.00	10.00	100	2007	2007	3	89	8,170	

LAND DESCRIPTION

TOTAL OB/XF 27,052

LN	USE CODE	CLS	LAND USE DESCRIPTION	CAP	RD	LOC ZONE	FRONT	DEPTH	TOT LND UTS	UNIT TYPE	DT	DPTH FACT	% COND	TOT ADJ	UNIT PRICE	ADJ UNIT PRICE	LAND VALUE	OTHER ADJUSTMENTS AND NOTES	YEAR	DENSITY	DECL	FRZ	YR	CONSRV
1	000100	C	SFR	100	0006		0.00	0.00	1.00	LT		1.00	1.00	1.00	50,000.00	50,000.00	50,000							

REVIEW DATE 10/21/2021 BY KB Total Acres: 0.00 Total Land Value: 50,000 Market: 0 Agricultural: 0 Common: 50,000 PRINTED 08/02/2023 BY SYS

BLOCK 13 LOT 36
SPRING LAKE EST 4 REPLAT
PB 6/177 FKA BLK 13 LOT 39

KING RAY E & CHARLIE JEAN L/E/
55747 BEAR RUN ROAD
CALLAHAN, FL 32011

2023

46-2N-25-197D-0013-0360

BUILDING CHARACTERISTICS

ELEMENT	CD	CONSTRUCTION
Exterior Wall	25	MOD METAL 100
Roof Structur	10	STEEL FRME 100
Roof Cover	12	MODULAR MT 100
Interior Wall	07	NONE 90
Interior Wall	05	DRYWALL 10
Interior Floo	03	CONC FINSH 100
Air Condition	01	NONE 100
Heating Type	01	NONE 100
Bedrooms		0 100
Bathrooms		0 100
Frame	02	WOOD FRAME 100
Stories	1.	1. 100
Units		0 100
Occupancy	00	NONE 100
Quality	03	Quality Level 03
DOR CODE	0100	SINGLE FAMILY
MAP NUM		MKT AREA 08
NEIGHBORHOOD/LOC	8010.00	

AREA TYPE	TOTAL GROSS AREA	PCT OF BASE	TOT ADJ AREA	SUBAREA MARKET VALUE
BAS	840	100	840	11,463
TOTALS	840		840	11,463

MARKET ADJUSTMENTS

TYPE	MDL	EFF. AREA	TOT ADJ PTS	EFF. BASE RATE	REPL. COST NEW	AYB	EYB	ECON	FNCT		NORM	% COND
6500	01	840	52.7000	18.44	15,490	2004	2004	0	0	0	26.00	74.00

2 GARAGE RES – 100% - 2005 Heated Area: 840 HX Base Yr 2005

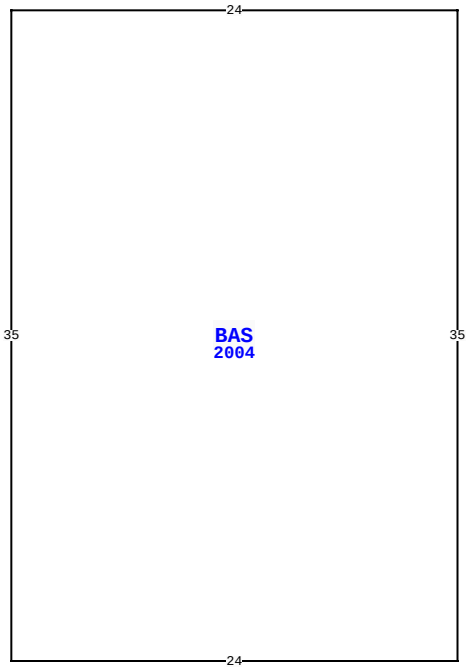

55747 BEAR RUN RD, CALLAHAN

BLD DATE		LGL DATE	
XF DATE		LAND DATE	
INC DATE		AG DATE	

NASSAU COUNTY PROPERTY

PAGE 2 of 2 6

VALUATION SUMMARY

VALUATION BY		STANDARD
Tax Group: 6	Tax Dist:	
BUILDING MARKET VALUE		325,864
TOTAL MARKET OB/XF VALUE		27,052
TOTAL LAND VALUE - MARKET		50,000
TOTAL MARKET VALUE		402,916
SOH/AGL Deduction		195,624
ASSESSED VALUE		207,292
TOTAL EXEMPTION VALUE	HX HB	50,000
BASE TAXABLE VALUE		157,292
TOTAL JUST VALUE		402,916
NCON VALUE		0
INCOME VALUE		
PREVIOUS YEAR MKT VALUE		328,300

PERMIT NUM	DESCRIPTION	AMT	ISSUED

SALES DATA

OFF RECORD Number	DATE	TYPE INST	Q / U	V / I	RSN CD	SALE PRICE
2441/0231	3/03/2021	LE	U	I	11	100
GRANTOR: KING RAY E & CHARLIE						
GRANTEE: MURPHY RAEANNE						
1123/0024	3/20/2003	WD	Q	V		28,800
GRANTOR: BKS INC						
GRANTEE: KING RAY E & CHARLI						

BUILDING NOTES

BUILDING DIMENSIONS

BAS=[YR=2004] E24 S35 W24 N35$.

EXTRA FEATURES

L N	OB/XF CODE	DESCRIPTION	BLD	CAP	L	W	UNITS	UT	Adj R	ADJ UNIT PRICE	ORIG COND	YEAR ON	YEAR ACTUAL	Q	% COND	OB/XF MKT VALUE	NOTES

LAND DESCRIPTION

TOTAL OB/XF 0

L N	USE CODE	CLS	LAND USE DESCRIPTION	CAP	R D	LOC ZONE	FRONT	DEPTH	TOT LND UTS	UNIT TYPE	D T	DPTH FACT	% COND	TOT ADJ	UNIT PRICE	ADJ UNIT PRICE	LAND VALUE	OTHER ADJUSTMENTS AND NOTES	YEAR	DENSITY	DECL	FRZ	YR	CONSRV

REVIEW DATE 10/21/2021 BY KB Total Acres: 0.00 Total Land Value: 50,000 Market: 0 Agricultural: 0 Common: 50,000 PRINTED 08/02/2023 BY SYS