BLOCK 13 LOT 35
IN OR 2154/1629
CONSERV ESMT PT OR 929/824

REED BRIAN E & RENE
55703 BEAR RUN ROAD
CALLAHAN, FL 32011

2023

46-2N-25-197D-0013-0350

BUILDING CHARACTERISTICS

ELEMENT	CD	CONSTRUCTION
Exterior Wall	05	AVERAGE 50
Exterior Wall	17	CB STUCCO 50
Roof Structur	03	GABLE/HIP 100
Roof Cover	03	COMP SHNGL 100
Interior Wall	05	DRYWALL 100
Interior Floo	11	CLAY TILE 50
Interior Floo	14	CARPET 50
Air Condition	03	CENTRAL 100
Heating Type	04	AIR DUCTED 100
Bedrooms		4 100
Bathrooms		3.5 100
Frame	02	WOOD FRAME 100
Stories	2.	2. 100
Units		0 100
Occupancy	00	NONE 100
Quality	03	Quality Level 03
DOR CODE	0100	SINGLE FAMILY
MAP NUM		MKT AREA 08
NEIGHBORHOOD/LOC	8010.00	

AREA TYPE	TOTAL GROSS AREA	PCT OF BASE	TOT ADJ AREA	SUBAREA MARKET VALUE
BAS	1,364	100	1,364	161,102
FGR	396	55	218	25,748
FOP	16	30	5	591
FUS	1,616	100	1,616	190,866
USP	180	30	54	6,378
TOTALS	3,572		3,257	384,684

MARKET ADJUSTMENTS

TYPE	MDL	EFF. AREA	TOT ADJ PTS	EFF. BASE RATE	REPL. COST NEW	AYB	EYB	ECON	FNCT		NORM	% COND
0900	01	3,257	104.4200	124.00	403,868	2004	2012	0	0	0	4.75	95.25

1 SNGL FAM – 100% - 2019 Heated Area: 2980 HX Base Yr 2019

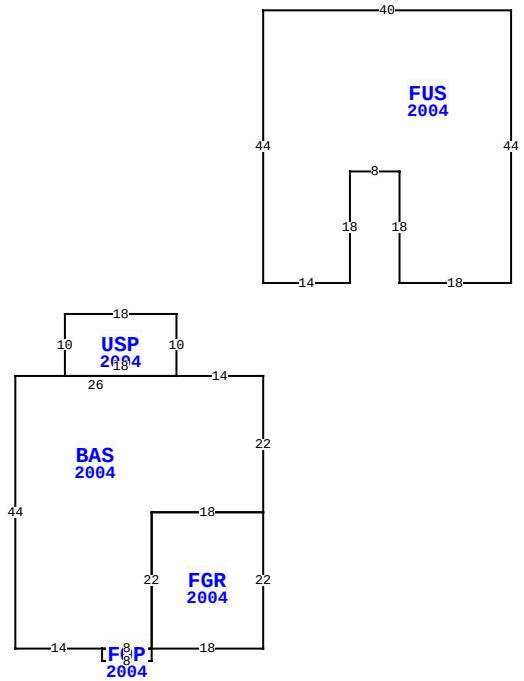

55703 BEAR RUN RD, CALLAHAN

BLD DATE		LGL DATE	
XF DATE		LAND DATE	
INC DATE		AG DATE	

NASSAU COUNTY PROPERTY

VALUATION SUMMARY

VALUATION BY		STANDARD
Tax Group: 6	Tax Dist:	
BUILDING MARKET VALUE		405,666
TOTAL MARKET OB/XF VALUE		16,519
TOTAL LAND VALUE - MARKET		50,000
TOTAL MARKET VALUE		472,185
SOH/AGL Deduction		175,108
ASSESSED VALUE		297,077
TOTAL EXEMPTION VALUE	HX HB	50,000
BASE TAXABLE VALUE		247,077
TOTAL JUST VALUE		472,185
NCON VALUE		0
INCOME VALUE		
PREVIOUS YEAR MKT VALUE		372,751

PERMIT NUM	DESCRIPTION	AMT	ISSUED
21003704	REPAIR/RRF	12,596	03/26/2021
20005622	GARAGE	41,731	06/29/2020
1709148	REPAIR/RRF	5,400	10/17/2017
B12012	NEW CONSTR	211,822	12/01/2003

SALES DATA

OFF RECORD Number	DATE	TYPE INST	Q / U	V / I	RSN CD	SALE PRICE
2154/1629	10/31/2017	WD	Q	I	01	285,000
GRANTOR: MULLINS ROBERT G & TO						
GRANTEE: REED BRIAN E & RENE						
2049/0798	5/27/2016	WD	Q	I	01	236,000
GRANTOR: COGAN TIMOTHY JAMES &						
GRANTEE: MULLINS ROBERT G &						

BUILDING NOTES

BUILDING DIMENSIONS

BAS=[YR=2004] W14 USP=[YR=2004] N10 W18 S10 E18$ W26 S44 E14 FOP=[YR=2004] S2 E8 N2 W8$ E8 FGR=[YR=2004] E18 N22 W18 S22$ N22 E18 N22$ PTR= N15 FUS=[YR=2004] N44 E40 S44 W18 N18 W8 S18 W14$ S15$.

EXTRA FEATURES

LN	OB/XF CODE	DESCRIPTION	BLD	CAP	L	W	UNITS	UT	Adj R	ADJ UNIT PRICE	ORIG COND	YEAR ON	YEAR ACTUAL	Q	% COND	OB/XF MKT VALUE	NOTES
1	0810	CONCRETE A	0	100	0	0	905.00	SF	6.50	6.50	100	2004	2004	3	86	5,059	
2	0855	CONC PAVER	0	100	0	0	240.00	SF	10.00	10.00	100	2015	2015	3	96	2,304	
3	0812	CONCRETE C	0	100	0	0	2,289.00	SF	4.00	4.00	100	2021	2021	3	100	9,156	

LAND DESCRIPTION

TOTAL OB/XF 16,519

LN	USE CODE	CLS	LAND USE DESCRIPTION	CAP	RD	LOC ZONE	FRONT	DEPTH	TOT LND UTS	UNIT TYPE	DT	DPTH FACT	% COND	TOT ADJ	UNIT PRICE	ADJ UNIT PRICE	LAND VALUE	OTHER ADJUSTMENTS AND NOTES	YEAR	DENSITY	DECL	FRZ	YR	CONSRV
1	000100	C	SFR	100			0.00	0.00	1.00	LT		1.00	1.00	1.00	50,000.00	50,000.00	50,000							

REVIEW DATE 10/21/2021 BY KB Total Acres: 0.00 Total Land Value: 50,000 Market: 0 Agricultural: 0 Common: 50,000 PRINTED 08/02/2023 BY SYS

BLOCK 13 LOT 35
IN OR 2154/1629
CONSERV ESMT PT OR 929/824

REED BRIAN E & RENE
55703 BEAR RUN ROAD
CALLAHAN, FL 32011

2023

46-2N-25-197D-0013-0350

BUILDING CHARACTERISTICS

ELEMENT	CD	CONSTRUCTION
Exterior Wall	25	MOD METAL 100
Roof Structur	03	GABLE/HIP 100
Roof Cover	12	MODULAR MT 100
Interior Wall	01	MINIMUM 100
Interior Floo	03	CONC FINSH 100
Air Condition	01	NONE 100
Heating Type	01	NONE 100
Bedrooms		0 100
Bathrooms		0 100
Frame	05	STEEL 100
Stories	1.	1. 100
Units		0 100
Occupancy	00	NONE 100
Quality	06	Quality Level 06

DOR CODE	0100	SINGLE FAMILY	
MAP NUM		MKT AREA	08
NEIGHBORHOOD/LOC	8010.00		

AREA TYPE	TOTAL GROSS AREA	PCT OF BASE	TOT ADJ AREA	SUBAREA MARKET VALUE
BAS	864	100	864	20,982
TOTALS	864		864	20,982

MARKET ADJUSTMENTS

TYPE	MDL	EFF. AREA	TOT ADJ PTS	EFF. BASE RATE	REPL. COST NEW	AYB	EYB	ECON	FNCT		NORM	% COND
6500	01	864	70.7940	24.78	21,410	2020	2020	0	0	0	2.00	98.00

2 GARAGE RES – 100% - 2019 Heated Area: 864 HX Base Yr 2019

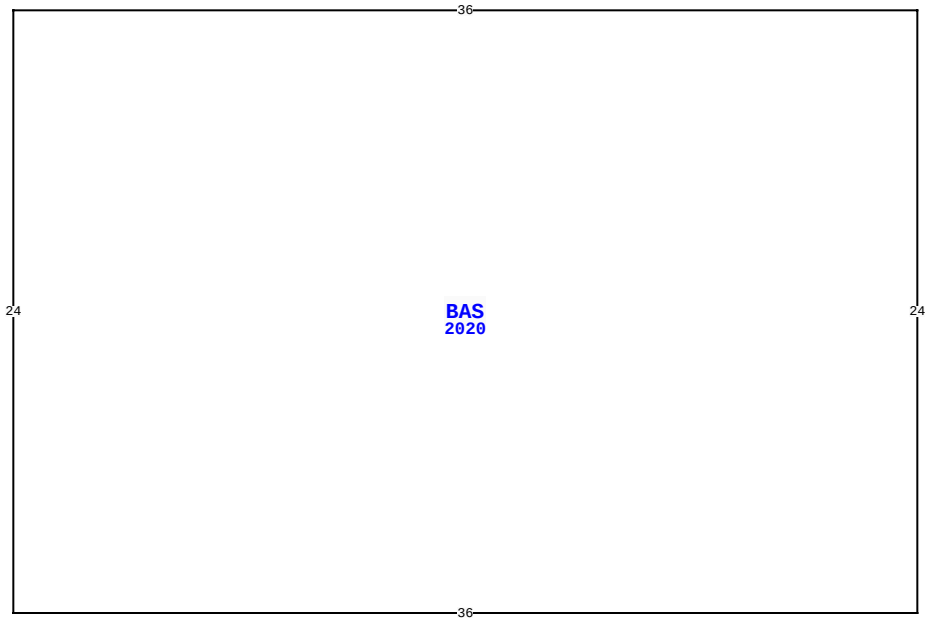

55703 BEAR RUN RD, CALLAHAN

BLD DATE		LGL DATE	
XF DATE		LAND DATE	
INC DATE		AG DATE	

NASSAU COUNTY PROPERTY

PAGE 2 of 2 6

VALUATION SUMMARY

VALUATION BY		STANDARD
Tax Group: 6	Tax Dist:	
BUILDING MARKET VALUE		405,666
TOTAL MARKET OB/XF VALUE		16,519
TOTAL LAND VALUE - MARKET		50,000
TOTAL MARKET VALUE		472,185
SOH/AGL Deduction		175,108
ASSESSED VALUE		297,077
TOTAL EXEMPTION VALUE	HX HB	50,000
BASE TAXABLE VALUE		247,077
TOTAL JUST VALUE		472,185
NCON VALUE		0
INCOME VALUE		
PREVIOUS YEAR MKT VALUE		372,751

PERMIT NUM	DESCRIPTION	AMT	ISSUED

SALES DATA

OFF RECORD Number	DATE	TYPE INST	Q / U	V / I	RSN CD	SALE PRICE
2154/1629	10/31/2017	WD	Q	I	01	285,000
GRANTOR: MULLINS ROBERT G & TO						
GRANTEE: REED BRIAN E & RENE						
2049/0798	5/27/2016	WD	Q	I	01	236,000
GRANTOR: COGAN TIMOTHY JAMES &						
GRANTEE: MULLINS ROBERT G &						

BUILDING NOTES

BUILDING DIMENSIONS

BAS=[YR=2020] W36 S24 E36 N24$.

EXTRA FEATURES

L N	OB/XF CODE	DESCRIPTION	BLD	CAP	L	W	UNITS	UT	Adj R	ADJ UNIT PRICE	ORIG COND	YEAR ON	YEAR ACTUAL	Q	% COND	OB/XF MKT VALUE	NOTES

LAND DESCRIPTION

TOTAL OB/XF 0

L N	USE CODE	CLS	LAND USE DESCRIPTION	CAP	R D	LOC ZONE	FRONT	DEPTH	TOT LND UTS	UNIT TYPE	D T	DPTH FACT	% COND	TOT ADJ	UNIT PRICE	ADJ UNIT PRICE	LAND VALUE	OTHER ADJUSTMENTS AND NOTES	YEAR	DENSITY	DECL	FRZ	YR	CONSRV

REVIEW DATE 10/21/2021 BY KB Total Acres: 0.00 Total Land Value: 50,000 Market: 0 Agricultural: 0 Common: 50,000 PRINTED 08/02/2023 BY SYS