BLOCK 13 LOT 34
CONSERV ESMT PT OR 929/824
SPRING LAKE EST 4 REPLAT

55665 BEAR RUN LAND TRUST/BEST POINT EAST LLC TRUS
3431 WORLD COURT
JACKSONVILLE, FL 32277

2023

46-2N-25-197D-0013-0340

NASSAU COUNTY PROPERTY

BUILDING CHARACTERISTICS

ELEMENT	CD	CONSTRUCTION
Exterior Wall	17	CB STUCCO 50
Exterior Wall	30	VINYL 50
Roof Structur	03	GABLE/HIP 100
Roof Cover	03	COMP SHNGL 100
Interior Wall	05	DRYWALL 100
Interior Floo	14	CARPET 80
Interior Floo	08	SHT VINYL 20
Air Condition	03	CENTRAL 100
Heating Type	04	AIR DUCTED 100
Bedrooms		4 100
Bathrooms		2.5 100
Frame	03	MASONRY 100
Stories	2.	2. 100
Units		0 100
Occupancy	00	NONE 100
Quality	03	Quality Level 03
DOR CODE	0100	SINGLE FAMILY
MAP NUM		MKT AREA 08
NEIGHBORHOOD/LOC	8010.00	

AREA TYPE	TOTAL GROSS AREA	PCT OF BASE	TOT ADJ AREA	SUBAREA MARKET VALUE
BAS	1,170	100	1,170	122,468
FGR	600	55	330	34,542
FOP	18	30	5	524
FUS	1,613	100	1,613	168,837
PTO	220	5	11	1,152
TOTALS	3,621		3,129	327,522

MARKET ADJUSTMENTS

TYPE	MDL	EFF. AREA	TOT ADJ PTS	EFF. BASE RATE	REPL. COST NEW	AYB	EYB	ECON	FNCT		NORM	% COND
0900	01	3,129	96.6000	114.71	358,928	2004	2004	0	0	0	8.75	91.25

1 SNGL FAM – 100% - 2006 Heated Area: 2783 HX Base Yr 2006

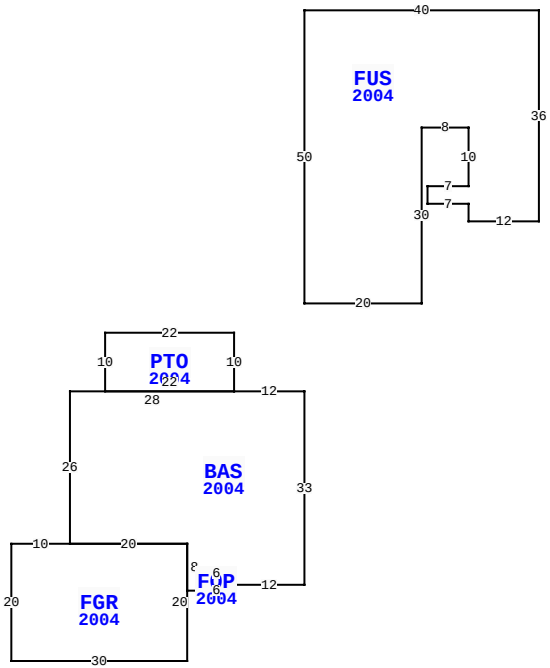

55665 BEAR RUN RD, CALLAHAN

BLD DATE		LGL DATE	
XF DATE		LAND DATE	
INC DATE		AG DATE	

VALUATION SUMMARY

VALUATION BY		STANDARD
Tax Group: 6	Tax Dist:	
BUILDING MARKET VALUE		327,522
TOTAL MARKET OB/XF VALUE		4,365
TOTAL LAND VALUE - MARKET		50,000
TOTAL MARKET VALUE		381,887
SOH/AGL Deduction		203,171
ASSESSED VALUE		178,716
TOTAL EXEMPTION VALUE	HX HB	50,000
BASE TAXABLE VALUE		128,716
TOTAL JUST VALUE		381,887
NCON VALUE		0
INCOME VALUE		
PREVIOUS YEAR MKT VALUE		302,021

PERMIT NUM	DESCRIPTION	AMT	ISSUED
R2308464	ROOF	10,080	06/30/2023
B12011	NEW CONSTR	244,309	12/04/2003

SALES DATA

OFF RECORD Number	DATE	TYPE INST	Q U	V I	RSN CD	SALE PRICE
2641/1115	5/10/2023	WD	Q	I	01	265,000
GRANTOR: MERIDIAN TRUST HOLDIN						
GRANTEE: 55665 BEAR RUN LAND						
2641/1111	5/12/2023	WD	Q	I	01	250,000
GRANTOR: DOWNING BRADLEY C						
GRANTEE: MERIDIAN TRUST HOLD						

BUILDING NOTES

BUILDING DIMENSIONS

BAS=[YR=2004] W12 PTO=[YR=2004] N10 W22 S10 E22$ W28 S26 FGR=[YR=2004] W10 S20 E30 N20 W20$ E20 S8 E2 FOP=[YR=2004] E6 N3 W6 S3$ N3 E6 S2 E12 N33$ PTR=N15 FUS=[YR=2004] N50 E40 S36 W12 N3 W7 N3 E7 N10 W8 S30 W20$ S15$.

EXTRA FEATURES

LN	OB/XF CODE	DESCRIPTION	BLD	CAP	L	W	UNITS	UT	Adj R	ADJ UNIT PRICE	ORIG COND	YEAR ON	YEAR ACTUAL	Q	% COND	OB/XF MKT VALUE	NOTES
1	0812	CONCRETE C	0	100	0	0	1,269.00	SF	4.00	4.00	100	2004	2004	3	86	4,365	

LAND DESCRIPTION

TOTAL OB/XF 4,365

LN	USE CODE	CLS	LAND USE DESCRIPTION	CAP	RD	LOC ZONE	FRONT	DEPTH	TOT LND UTS	UNIT TYPE	DT	DPTH FACT	% COND	TOT ADJ	UNIT PRICE	ADJ UNIT PRICE	LAND VALUE	OTHER ADJUSTMENTS AND NOTES	YEAR	DENSITY	DECL	FRZ	YR	CONSRV
1	000100	C	SFR	100			0.00	0.00	1.00	LT		1.00	1.00	1.00	50,000.00	50,000.00	50,000							

REVIEW DATE 01/06/2023 BY KWA Total Acres: 0.00 Total Land Value: 50,000 Market: 0 Agricultural: 0 Common: 50,000 PRINTED 08/02/2023 BY SYS