BLOCK 13 LOT 27
IN OR 2076/297
CONSERV ESMT PT OR 929/824

DOMONDON ROBERT P & CRYSTAL ANN NEWSOM
54843 SPRING LAKE DR
CALLAHAN, FL 32011

2023

46-2N-25-197D-0013-0270

NASSAU COUNTY PROPERTY

BUILDING CHARACTERISTICS

ELEMENT	CD	CONSTRUCTION
Exterior Wall	10	ABOVE AVG 100
Roof Structur	03	GABLE/HIP 100
Roof Cover	03	COMP SHNGL 100
Interior Wall	05	DRYWALL 80
Interior Wall	06	CUST PANEL 20
Interior Floo	14	CARPET 60
Interior Floo	12	HARDWOOD 40
Air Condition	03	CENTRAL 100
Heating Type	04	AIR DUCTED 100
Bedrooms		4 100
Bathrooms		3 100
Frame	02	WOOD FRAME 100
Stories	2.	2. 100
Units		0 100
Occupancy	00	NONE 100
Quality	03	Quality Level 03
DOR CODE	0100	SINGLE FAMILY
MAP NUM		MKT AREA 08
NEIGHBORHOOD/LOC	8010.00	

AREA TYPE	TOTAL GROSS AREA	PCT OF BASE	TOT ADJ AREA	SUBAREA MARKET VALUE
BAS	1,228	100	1,228	142,756
FGR	496	55	273	31,736
FOP	180	30	54	6,277
FSP	180	40	72	8,370
FUS	1,342	100	1,342	156,009
TOTALS	3,426		2,969	345,150

MARKET ADJUSTMENTS

TYPE	MDL	EFF. AREA	TOT ADJ PTS	EFF. BASE RATE	REPL. COST NEW	AYB	EYB	ECON	FNCT		NORM	% COND
0900	01	2,969	106.4080	126.36	375,163	2005	2005	0	0	0	8.00	92.00

1 SNGL FAM – 100% - 2018 Heated Area: 2570 HX Base Yr 2018

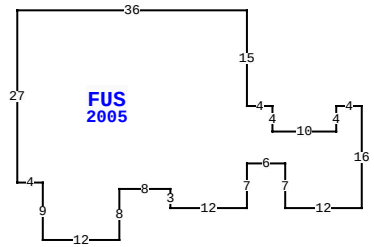

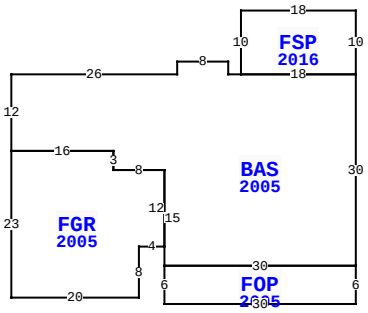

54843 SPRING LAKE DR, CALLAHAN

BLD DATE		LGL DATE	
XF DATE		LAND DATE	
INC DATE		AG DATE	

VALUATION SUMMARY

VALUATION BY		STANDARD
Tax Group: 6	Tax Dist:	
BUILDING MARKET VALUE		345,150
TOTAL MARKET OB/XF VALUE		7,972
TOTAL LAND VALUE - MARKET		50,000
TOTAL MARKET VALUE		403,122
SOH/AGL Deduction		164,002
ASSESSED VALUE		239,120
TOTAL EXEMPTION VALUE	HX HB	50,000
BASE TAXABLE VALUE		189,120
TOTAL JUST VALUE		403,122
NCON VALUE		0
INCOME VALUE		
PREVIOUS YEAR MKT VALUE		316,622

PERMIT NUM	DESCRIPTION	AMT	ISSUED
M09275	MECH OTHER	0	02/01/2005
E0514267	ELEC OTHER	2,000	02/01/2005
P08882	OTHER	2,000	02/01/2005
B14294	NEW CONSTR	176,466	12/29/2004
R7043	REPAIR/RRF	1,500	12/29/2004

SALES DATA

OFF RECORD Number	DATE	TYPE INST	Q / U	V / I	RSN CD	SALE PRICE
2076/0297	10/03/2016	WD	Q	I	01	258,500
GRANTOR: JOHNSON MICHAEL R						
GRANTEE: DOMONDON ROBERT P &						
1381/0918	1/12/2006	QC	U	I	07	100
GRANTOR: DUGGAN MITCHELL						
GRANTEE: JOHNSON MICHAEL R						

BUILDING NOTES

BUILDING DIMENSIONS

FSP=[YR=2016] W18 S10 BAS=[YR=2005] W2 N2 W8 S2 W26 S12
FGR=[YR=2005] S23 E20 N8 E4 N12 W8 N3 W16$ E16 S3 E8 S15
FOP=[YR=2005] S6 E30 N6 W30$ E30 N30 W18$ E18 N10$ PTR=N20
FUS=[YR=2005] N9 W4 N27 E36 S15 E4 S4 E10 N4 E4 S16 W12 N7 W6 S7 W12 N3 W8 S8 W12$ S20$.

EXTRA FEATURES

LN	OB/XF CODE	DESCRIPTION	BLD	CAP	L	W	UNITS	UT	Adj R	ADJ UNIT PRICE	ORIG COND	YEAR ON	YEAR ACTUAL	Q	% COND	OB/XF MKT VALUE	NOTES
1	0500	FP-PRE FAB	0	100	0	0	1.00	UT	3,500.00	3,500.00	100	2005	2005	3	90	3,150	
2	0812	CONCRETE C	0	100	0	0	1,239.00	SF	4.00	4.00	100	2005	2005	3	87	4,312	
3	0911	SCRN RM A	0	100	18	6	108.00	SF	17.50	17.50	100	2005	2005	3	27	510	

LAND DESCRIPTION

TOTAL OB/XF 7,972

LN	USE CODE	CLS	LAND USE DESCRIPTION	CAP	RD	LOC ZONE	FRONT	DEPTH	TOT LND UTS	UNIT TYPE	DT	DPTH FACT	% COND	TOT ADJ	UNIT PRICE	ADJ UNIT PRICE	LAND VALUE	OTHER ADJUSTMENTS AND NOTES	YEAR	DENSITY	DECL	FRZ	YR	CONSRV
1	000134	C	SFR POND	100	0006		0.00	0.00	1.00	LT		1.00	1.00	1.00	50,000.00	50,000.00	50,000							

REVIEW DATE 02/23/2017 BY KBX Total Acres: 0.00 Total Land Value: 50,000 Market: 0 Agricultural: 0 Common: 50,000 PRINTED 08/02/2023 BY SYS