BLOCK 13 LOT 20
IN OR 1621/1782
CONSERV ESMT PT OR 929/824

THE CARLA E BROCK REVOCABLE LVG TRUST/BROCK CARLA
PO BOX 1913
CALLAHAN, FL 32011-1913

2023

46-2N-25-197D-0013-0200

BUILDING CHARACTERISTICS

ELEMENT	CD	CONSTRUCTION
Exterior Wall	05	AVERAGE 50
Exterior Wall	17	CB STUCCO 50
Roof Structur	03	GABLE/HIP 100
Roof Cover	03	COMP SHNGL 100
Interior Wall	05	DRYWALL 100
Interior Floo	14	CARPET 70
Interior Floo	11	CLAY TILE 30
Air Condition	03	CENTRAL 100
Heating Type	04	AIR DUCTED 100
Bedrooms		4 100
Bathrooms		3.5 100
Frame	02	WOOD FRAME 100
Stories	2.	2. 100
Units		0 100
Occupancy	00	NONE 100
Quality	03	Quality Level 03
DOR CODE	0100	SINGLE FAMILY
MAP NUM		MKT AREA 08
NEIGHBORHOOD/LOC	8010.00	

AREA TYPE	TOTAL GROSS AREA	PCT OF BASE	TOT ADJ AREA	SUBAREA MARKET VALUE
BAS	1,364	100	1,364	150,802
FGR	396	55	218	24,102
FOP	16	30	5	553
FUS	1,616	100	1,616	178,663
USP	180	30	54	5,970
TOTALS	3,572		3,257	360,089

MARKET ADJUSTMENTS

TYPE	MDL	EFF. AREA	TOT ADJ PTS	EFF. BASE RATE	REPL. COST NEW	AYB	EYB	ECON	FNCT		NORM	% COND
0900	01	3,257	102.0280	121.16	394,618	2004	2004	0	0	0	8.75	91.25

1 SNGL FAM – 100% - 2006 Heated Area: 2980 HX Base Yr 2006

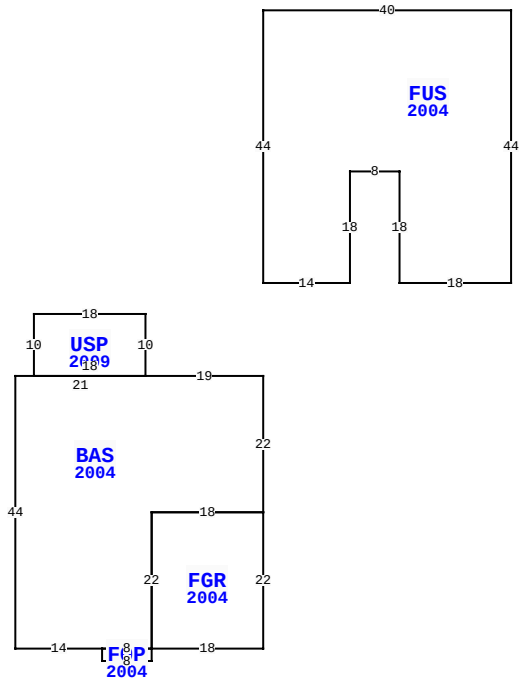

55324 LITTLE BROOK DR, CALLAHAN

BLD DATE		LGL DATE	
XF DATE		LAND DATE	
INC DATE		AG DATE	

NASSAU COUNTY PROPERTY

VALUATION SUMMARY

VALUATION BY		STANDARD
Tax Group: 6	Tax Dist:	
BUILDING MARKET VALUE		360,089
TOTAL MARKET OB/XF VALUE		4,107
TOTAL LAND VALUE - MARKET		50,000
TOTAL MARKET VALUE		414,196
SOH/AGL Deduction		221,212
ASSESSED VALUE		192,984
TOTAL EXEMPTION VALUE	HX HB	50,000
BASE TAXABLE VALUE		142,984
TOTAL JUST VALUE		414,196
NCON VALUE		0
INCOME VALUE		
PREVIOUS YEAR MKT VALUE		326,685

PERMIT NUM	DESCRIPTION	AMT	ISSUED
B22167	REMODEL	1,975	12/01/2008
B11752	NEW CONSTR	212,586	09/01/2003

SALES DATA

OFF RECORD Number	DATE	TYPE INST	Q U	V I	RSN CD	SALE PRICE
1621/1782	3/05/2009	WD	U	I	30	100
GRANTOR: BROCK CARLA						
GRANTEE: BROCK CARLA E TRUST						
1345/0002	8/26/2005	WD	Q	I		258,000
GRANTOR: THOMPSON CHARLES W &						
GRANTEE: BROCK CARLA						

BUILDING NOTES

BUILDING DIMENSIONS

BAS=[YR=2004] W19 USP=[YR=2009] N10 W18 S10 E18$ W21 S44 E14 FOP=[YR=2004] S2 E8 N2 W8$ E8 FGR=[YR=2004] E18 N22 W18 S22$ N22 E18 N22$ PTR= N15 FUS=[YR=2004] N44 E40 S44 W18 N18 W8 S18 W14$ S15$.

EXTRA FEATURES

LN	OB/XF CODE	DESCRIPTION	BLD	CAP	L	W	UNITS	UT	Adj R	ADJ UNIT PRICE	ORIG COND	YEAR ON	YEAR ACTUAL	Q	% COND	OB/XF MKT VALUE	NOTES
1	0812	CONCRETE C	0	100	0	0	1,194.00	SF	4.00	4.00	100	2004	2004	3	86	4,107	

LAND DESCRIPTION

TOTAL OB/XF 4,107

LN	USE CODE	CLS	LAND USE DESCRIPTION	CAP	RD	LOC ZONE	FRONT	DEPTH	TOT LND UTS	UNIT TYPE	DT	DPTH FACT	% COND	TOT ADJ	UNIT PRICE	ADJ UNIT PRICE	LAND VALUE	OTHER ADJUSTMENTS AND NOTES	YEAR	DENSITY	DECL	FRZ	YR	CONSRV
1	000100	C	SFR	100	0006		0.00	0.00	1.00	LT		1.00	1.00	1.00	50,000.00	50,000.00	50,000							

REVIEW DATE 02/12/2018 BY KNX Total Acres: 0.00 Total Land Value: 50,000 Market: 0 Agricultural: 0 Common: 50,000 PRINTED 08/02/2023 BY SYS