BLOCK 11 LOT 45
IN OR 1947/1280
SPRING LAKE ESTATES 3 PB 5/198

WALDRON WILLIAM C III & KATHY
55474 DEER RUN RD
CALLAHAN, FL 32011

2023

46-2N-25-197C-0011-0450

BUILDING CHARACTERISTICS

ELEMENT	CD	CONSTRUCTION
Exterior Wall	10	ABOVE AVG 60
Exterior Wall	23	REINF CONC 40
Roof Structur	03	GABLE/HIP 100
Roof Cover	03	COMP SHNGL 100
Interior Wall	05	DRYWALL 100
Interior Floo	15	HARDTILE 80
Interior Floo	14	CARPET 20
Air Condition	03	CENTRAL 100
Heating Type	04	AIR DUCTED 100
Bedrooms		6 100
Bathrooms		6 100
Frame	02	WOOD FRAME 100
Stories	3.	3. 100
Units		0 100
Occupancy	00	NONE 100
Quality	03	Quality Level 03
DOR CODE	0100	SINGLE FAMILY
MAP NUM		MKT AREA 08
NEIGHBORHOOD/LOC	8010.00	

AREA TYPE	TOTAL GROSS AREA	PCT OF BASE	TOT ADJ AREA	SUBAREA MARKET VALUE
BAS	1,712	100	1,712	145,788
BAS	3,239	100	3,239	275,823
FGR	883	55	486	41,386
FGR	1,081	55	595	50,668
FOP	160	30	48	4,088
FOP	392	30	118	10,049
FOP	410	30	123	10,474
FOP	410	30	123	10,474
FUS	1,200	100	1,200	102,188
UOP	238	20	48	4,088
TOTALS	9,725		7,692	655,026

MARKET ADJUSTMENTS

TYPE	MDL	EFF. AREA	TOT ADJ PTS	EFF. BASE RATE	REPL. COST NEW	AYB	EYB	ECON	FNCT	MA	NORM	% COND
0900	01	7,692	114.1900	135.60	1,043,035	2007	2007	0	0	30	7.20	62.80

1 SNGL FAM – 100% - 2015 Heated Area: 6151 HX Base Yr 2015

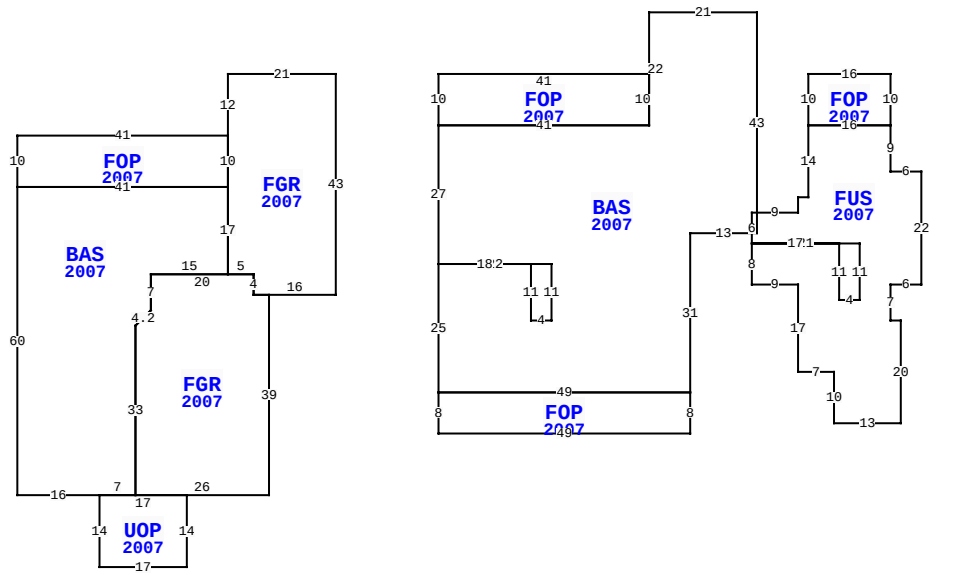

55474 DEER RUN RD, CALLAHAN

BLD DATE	11/07/2007 DJ	LGL DATE	
XF DATE		LAND DATE	
INC DATE		AG DATE	

NASSAU COUNTY PROPERTY

PAGE 1 of 1 6

VALUATION SUMMARY

VALUATION BY		STANDARD
Tax Group: 6	Tax Dist:	
BUILDING MARKET VALUE		655,026
TOTAL MARKET OB/XF VALUE		52,741
TOTAL LAND VALUE - MARKET		50,000
TOTAL MARKET VALUE		757,767
SOH/AGL Deduction		210,104
ASSESSED VALUE		547,663
TOTAL EXEMPTION VALUE	HX HB	50,000
BASE TAXABLE VALUE		497,663
TOTAL JUST VALUE		757,767
NCON VALUE		0
INCOME VALUE		
PREVIOUS YEAR MKT VALUE		594,255

PERMIT NUM	DESCRIPTION	AMT	ISSUED
M12143	MECH OTHER	0	10/01/2006
R09738	REPAIR/RRF	2,200	09/01/2006
E17797	ELEC OTHER	5,000	08/01/2006
P11467	OTHER	0	08/01/2006
C17892	CO ISSUED	0	06/01/2006
B17892	NEW CONSTR	429,199	06/01/2006

SALES DATA

OFF RECORD Number	DATE	TYPE INST	Q U	V I	RSN CD	SALE PRICE
1947/1280	11/14/2014	WD	Q	I	01	565,000
GRANTOR: MORRIS RODNEY T						
GRANTEE: WALDRON WILLIAM C I						
1374/1679	12/19/2005	WD	Q	V		45,000
GRANTOR: OUTSHINE ENTERPRISES						
GRANTEE: MORRIS RODNEY T						

BUILDING NOTES

EXTRA FEATURES

LN	OB/XF CODE	DESCRIPTION	BLD	CAP	L	W	UNITS	UT	Adj R	ADJ UNIT PRICE	ORIG COND	YEAR ON	YEAR ACTUAL	Q	% COND	OB/XF MKT VALUE	NOTES
1	0856	POROUS CC	0	100	0	0	5,093.00	SF	2.50	2.50	100	2007	2007	3	89	11,332	
3	0855	CONC PAVER	0	100	0	0	1,132.00	SF	7.00	7.00	100	2010	2010	3	92	7,290	
4	1076	TRELLIS A	0	100	12	16	192.00	SF	7.50	7.50	100	2011	2011	3	68	979	
5	0861	POOL GUNIT	0	100	0	0	600.00	SF	85.00	85.00	100	2010	2010	3	64	32,640	
6	0877	JACUZZI	0	100	0	0	1.00	UT	1,000.00	1,000.00	100	2010	2010	3	50	500	

BUILDING DIMENSIONS

FGR=[YR=2007] W21 S12 FOP=[YR=2007] W41 S10 E41 N10$ S10BAS=[YR=2007] W41 S60 E16 UOP=[YR=2007] S14 E17 N14 W17$ E7 FGR=[YR=2007] E26 N39 W3 N4 W20 S7 D3 L3 S33$ N33 U3 R3 N7E15 N17$ S17 E5 S4 E16 N43$ PTR=E20 FOP=[YR=2007] S10 BAS=[YR=2007] S27 E22 S11 W4 N11 W18 S25 FOP=[YR=2007] S8 E49 N8 W49$ E49 N31 E13 N43 W21 S22 W41$ E41 N10 W41$ W20$ PTR=E92 FOP=[YR=2007] S10 FUS=[YR=2007] S14 W2 S3 W9 S6 E21 S11 W4 N11 W17 S8 E9 S17 E7 S10 E13 N20 W2 N7 E6 N22 W6 N9 W16$ E16 N10 W16$ W92$.

LAND DESCRIPTION

TOTAL OB/XF 52,741

LN	USE CODE	CLS	LAND USE DESCRIPTION	CAP	RD	LOC ZONE	FRONT	DEPTH	TOT LND UTS	UNIT TYPE	DT	DPTH FACT	% COND	TOT ADJ	UNIT PRICE	ADJ UNIT PRICE	LAND VALUE	OTHER ADJUSTMENTS AND NOTES	YEAR	DENSITY	DECL	FRZ	YR	CONSRV
1	000100	C	SFR	100	0006	RS-1	0.00	0.00	1.00	LT		1.00	1.00	1.00	50,000.00	50,000.00	50,000							

REVIEW DATE 06/28/2017 BY KBX Total Acres: 0.00 Total Land Value: 50,000 Market: 0 Agricultural: 0 Common: 50,000 PRINTED 08/02/2023 BY SYS