BLOCK 5 LOT 10
L/E OR 1570/1604
SPRING LAKE EST #2 PB 5/185

TANNER YVONNE E L/E/
55335 DEER RUN ROAD
CALLAHAN, FL 32011

2023

46-2N-25-197B-0005-0100

NASSAU COUNTY PROPERTY

BUILDING CHARACTERISTICS

ELEMENT	CD	CONSTRUCTION
Exterior Wall	20	FACE BRICK 100
Roof Structur	03	GABLE/HIP 100
Roof Cover	03	COMP SHNGL 100
Interior Wall	05	DRYWALL 100
Interior Floo	14	CARPET 80
Interior Floo	11	CLAY TILE 20
Air Condition	03	CENTRAL 100
Heating Type	04	AIR DUCTED 100
Bedrooms		3 100
Bathrooms		3 100
Frame	02	WOOD FRAME 100
Stories	1.	1. 100
Units		0 100
Occupancy	00	NONE 100
Quality	03	Quality Level 03
DOR CODE	0100	SINGLE FAMILY
MAP NUM		MKT AREA 08
NEIGHBORHOOD/LOC	8010.00	

AREA TYPE	TOTAL GROSS AREA	PCT OF BASE	TOT ADJ AREA	SUBAREA MARKET VALUE
BAS	2,251	100	2,251	216,157
FEP	238	80	190	18,245
FGR	659	55	362	34,762
FOP	108	30	32	3,073
FST	90	55	50	4,802
PTO	60	5	3	288
UOP	288	20	58	5,570
TOTALS	3,694		2,946	282,896

MARKET ADJUSTMENTS

TYPE	MDL	EFF. AREA	TOT ADJ PTS	EFF. BASE RATE	REPL. COST NEW	AYB	EYB	ECON	FNCT		NORM	% COND
0900	01	2,946	105.8440	125.69	370,283	1990	1990	0	0	0	23.60	76.40

1 SNGL FAM – 100% - 1991 Heated Area: 2251 HX Base Yr 1991

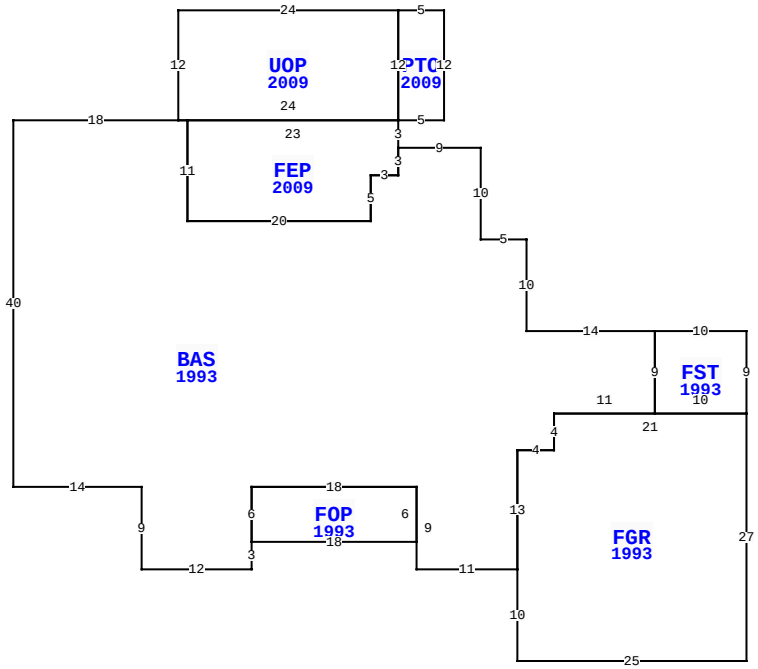

55335 DEER RUN RD, CALLAHAN

BLD DATE		LGL DATE	
XF DATE		LAND DATE	
INC DATE		AG DATE	

VALUATION SUMMARY

VALUATION BY		STANDARD
Tax Group: 6	Tax Dist:	
BUILDING MARKET VALUE		282,896
TOTAL MARKET OB/XF VALUE		19,799
TOTAL LAND VALUE - MARKET		50,000
TOTAL MARKET VALUE		352,695
SOH/AGL Deduction		178,758
ASSESSED VALUE		173,937
TOTAL EXEMPTION VALUE	HX HB WX BX	60,000
BASE TAXABLE VALUE		113,937
TOTAL JUST VALUE		352,695
NCON VALUE		0
INCOME VALUE		
PREVIOUS YEAR MKT VALUE		274,243

PERMIT NUM	DESCRIPTION	AMT	ISSUED
6336	NEW CONSTR	91,498	03/08/1990

SALES DATA

OFF RECORD Number	DATE	TYPE INST	Q U /	V I /	RSN CD	SALE PRICE
1570/1604	6/10/2008	QC	U	I	18	100
GRANTOR: TANNER YVONNE E						
GRANTEE: TANNER YVONNE E L/E						
0537/0742	2/24/1988	WD	Q	V		18,000
GRANTOR: SPRING LAKE DR						
GRANTEE: TANNER HAROLD B						

BUILDING NOTES

BUILDING DIMENSIONS

BAS=[YR=1993] W18 S40 E14 S9 E12 N3 FOP=[YR=1993] E18 N6 W18 S6$ N6 E18 S9 E11 FGR=[YR=1993] S10 E25 N27 FST=[YR=1993] N9 W10 S9 E10$ W21 S4 W4 S13$ N13 E4 N4 E11 N9 W14 N10 W5 N10 W9 FEP=[YR=2009] N3 PTO=[YR=2009] E5 N12 W5 UOP=[YR=2009] W24 S12 E24 N12$ S12$ W23 S11 E20 N5 E3 N3$ S3 W3 S5 W20 N11 W1$.

EXTRA FEATURES

LN	OB/XF CODE	DESCRIPTION	BLD	CAP	L	W	UNITS	UT	Adj R	ADJ UNIT PRICE	ORIG COND	YEAR ON	YEAR ACTUAL	Q	% COND	OB/XF MKT VALUE	NOTES
1	0812	CONCRETE C	0	100	0	0	3,527.00	SF	4.00	4.00	100	1990	1990	3	62	8,747	
2	0500	FP-PRE FAB	0	100	0	0	1.00	UT	3,500.00	3,500.00	100	1990	1990	3	70	2,450	
3	0300	BOAT DCK W	0	100	24	16	384.00	SF	40.00	40.00	100	2008	2008	3	56	8,602	

LAND DESCRIPTION

TOTAL OB/XF 19,799

LN	USE CODE	CLS	LAND USE DESCRIPTION	CAP	RD	LOC ZONE	FRONT	DEPTH	TOT LND UTS	UNIT TYPE	DT	DPTH FACT	% COND	TOT ADJ	UNIT PRICE	ADJ UNIT PRICE	LAND VALUE	OTHER ADJUSTMENTS AND NOTES	YEAR	DENSITY	DECL	FRZ	YR	CONSRV
1	000134	C	SFR POND	100	0006	RS-1	0.00	0.00	1.00	LT		1.00	1.00	1.00	50,000.00	50,000.00	50,000							

REVIEW DATE 08/02/2018 BY KBX Total Acres: 0.00 Total Land Value: 50,000 Market: 0 Agricultural: 0 Common: 50,000 PRINTED 08/02/2023 BY SYS