BLOCK 4 LOT 2
IN OR 1670/1568
SPRING LAKE EST #1 PB 5/183

MAHAN CHRISTINA C
55023 DEER RUN ROAD
CALLAHAN, FL 32011

2023

46-2N-25-197A-0004-0020

BUILDING CHARACTERISTICS

ELEMENT	CD	CONSTRUCTION
Exterior Wall	20	FACE BRICK 100
Roof Structur	03	GABLE/HIP 100
Roof Cover	03	COMP SHNGL 100
Interior Wall	05	DRYWALL 100
Interior Floo	12	HARDWOOD 80
Interior Floo	11	CLAY TILE 20
Air Condition	03	CENTRAL 100
Heating Type	04	AIR DUCTED 100
Bedrooms		4 100
Bathrooms		2.5 100
Frame	02	WOOD FRAME 100
Stories	1.5	1.5 100
Units		0 100
Occupancy	00	NONE 100
Quality	03	Quality Level 03
DOR CODE	0100	SINGLE FAMILY
MAP NUM		MKT AREA 08
NEIGHBORHOOD/LOC	8010.00	

AREA TYPE	TOTAL GROSS AREA	PCT OF BASE	TOT ADJ AREA	SUBAREA MARKET VALUE
BAS	1,700	100	1,700	168,144
FEP	564	80	451	44,607
FGR	605	55	333	32,937
FOP	360	30	108	10,682
FUS	720	100	720	71,214
TOTALS	3,949		3,312	327,583

MARKET ADJUSTMENTS

TYPE	MDL	EFF. AREA	TOT ADJ PTS	EFF. BASE RATE	REPL. COST NEW	AYB	EYB	ECON	FNCT		NORM	% COND
0900	01	3,312	105.4320	125.20	414,662	1989	1994	0	0	0	21.00	79.00

1 SNGL FAM – 100% - 2011 Heated Area: 2420 HX Base Yr 2011

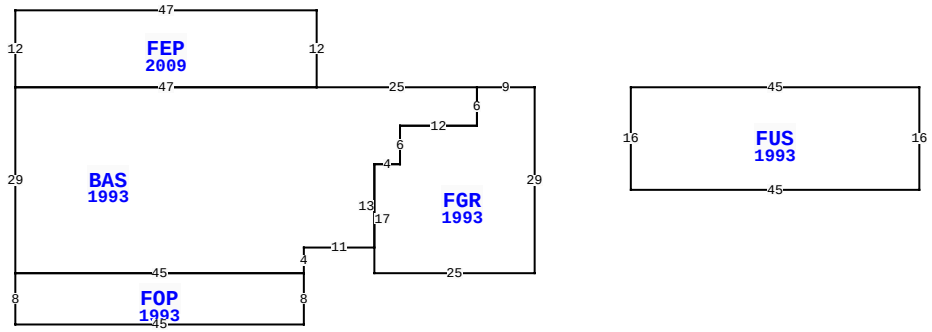

55023 DEER RUN RD, CALLAHAN

BLD DATE		LGL DATE	
XF DATE		LAND DATE	
INC DATE		AG DATE	

NASSAU COUNTY PROPERTY

PAGE 1 of 1 6

VALUATION SUMMARY

VALUATION BY		STANDARD
Tax Group: 6	Tax Dist:	
BUILDING MARKET VALUE		327,583
TOTAL MARKET OB/XF VALUE		16,009
TOTAL LAND VALUE - MARKET		50,000
TOTAL MARKET VALUE		393,592
SOH/AGL Deduction		189,024
ASSESSED VALUE		204,568
TOTAL EXEMPTION VALUE	HX HB	50,000
BASE TAXABLE VALUE		154,568
TOTAL JUST VALUE		393,592
NCON VALUE		0
INCOME VALUE		
PREVIOUS YEAR MKT VALUE		308,450

PERMIT NUM	DESCRIPTION	AMT	ISSUED
5518	NEW CONSTR	104,510	02/13/1989

SALES DATA

OFF RECORD Number	DATE	TYPE INST	Q U	V I	RSN CD	SALE PRICE
1670/1568	3/30/2010	WD	Q	I	01	259,000
GRANTOR: STEVENSON AARON C & D						
GRANTEE: MAHAN CHRISTINA C						
0974/0050	3/07/2001	WD	Q	I		203,800
GRANTOR: KELLY WILLIAM AVERY J						
GRANTEE: STEVENSON AARON C &						

BUILDING NOTES

BUILDING DIMENSIONS

FGR=[YR=1993] W9 BAS=[YR=1993] W25 FEP=[YR=2009] N12 W47
S12 E47 $ W47 S29 FOP=[YR=1993] S8 E45 N8 W45 $ E45 N4 E11
N13 E4 N6 E12 N6 $ S6 W12 S6 W4 S17 E25 N29 $ PTR= E15
FUS=[YR=1993] E45 S16 W45 N16 $ W15 $.

EXTRA FEATURES

LN	OB/XF CODE	DESCRIPTION	BLD	CAP	L	W	UNITS	UT	Adj R	ADJ UNIT PRICE	ORIG COND	YEAR ON	YEAR ACTUAL	Q	% COND	OB/XF MKT VALUE	NOTES
1	0500	FP-PRE FAB	0	100	0	0	1.00	UT	3,500.00	3,500.00	100	1989	1989	3	68	2,380	
2	0500	FP-PRE FAB	0	100	0	0	1.00	UT	3,500.00	3,500.00	100	1989	1989	3	68	2,380	
3	0812	CONCRETE C	0	100	0	0	1,815.00	SF	4.00	4.00	100	1989	1989	3	59.5	4,320	
4	0811	CONCRETE B	0	100	0	0	804.00	SF	5.20	5.20	100	1990	1990	3	62	2,592	
5	1242	WD DECK A	0	100	0	0	794.00	SF	10.00	10.00	100	1994	1994	3	20	1,588	
6	0940	SHEDS/PORT	0	100	10	16	160.00	SF	21.30	21.30	100	1995	1995	3	20	682	
7	0681	POLE SHED	0	100	7	16	112.00	SF	15.00	15.00	100	1996	1996	3	25	420	
8	0461	IRON FENCE	0	100	57	5	285.00	SF	8.50	8.50	100	1989	1989	3	68	1,647	

LAND DESCRIPTION

TOTAL OB/XF 16,009

LN	USE CODE	CLS	LAND USE DESCRIPTION	CAP	RD	LOC ZONE	FRONT	DEPTH	TOT LND UTS	UNIT TYPE	DT	DPTH FACT	% COND	TOT ADJ	UNIT PRICE	ADJ UNIT PRICE	LAND VALUE	OTHER ADJUSTMENTS AND NOTES	YEAR	DENSITY	DECL	FRZ	YR	CONSRV
1	000100	C	SFR	100		RS-1	0.00	0.00	1.00	LT		1.00	1.00	1.00	50,000.00	50,000.00	50,000							

REVIEW DATE 06/05/2020 BY KBA Total Acres: 0.00 Total Land Value: 50,000 Market: 0 Agricultural: 0 Common: 50,000 PRINTED 08/02/2023 BY SYS