BLOCK 3 LOT 12
IN OR 1232/180
SPRING LAKE EST #1 PB 5/183

UNDERWOOD JILL
5756 HECKSCHER DR
JACKSONVILLE, FL 32226

2023

46-2N-25-197A-0003-0120

NASSAU COUNTY PROPERTY

BUILDING CHARACTERISTICS

ELEMENT	CD	CONSTRUCTION
Exterior Wall	12	CEDAR 100
Roof Structur	03	GABLE/HIP 100
Roof Cover	03	COMP SHNGL 100
Interior Wall	05	DRYWALL 90
Interior Wall	06	CUST PANEL 10
Interior Floo	14	CARPET 60
Interior Floo	11	CLAY TILE 40
Air Condition	03	CENTRAL 100
Heating Type	04	AIR DUCTED 100
Bedrooms		3 100
Bathrooms		2.5 100
Frame	02	WOOD FRAME 100
Stories	2.	2. 100
Units		0 100
Occupancy	00	NONE 100
Quality	03	Quality Level 03
DOR CODE	0100	SINGLE FAMILY
MAP NUM		MKT AREA 08
NEIGHBORHOOD/LOC	8010.00	

AREA TYPE	TOTAL GROSS AREA	PCT OF BASE	TOT ADJ AREA	SUBAREA MARKET VALUE
BAS	1,629	100	1,629	184,537
BAS	80	100	80	9,063
FOP	50	30	15	1,699
FOP	102	30	31	3,512
FOP	430	30	129	14,613
FUS	536	100	536	60,719
PTO	75	5	4	453
UGR	576	45	259	29,340
TOTALS	3,478		2,683	303,936

MARKET ADJUSTMENTS

TYPE	MDL	EFF. AREA	TOT ADJ PTS	EFF. BASE RATE	REPL. COST NEW	AYB	EYB	ECON	FNCT		NORM	% COND
0900	01	2,683	113.5680	134.86	361,829	1990	1990	0	0	0	16.00	84.00

1 SNGL FAM – 0% - 0 Heated Area: 2245 HX Base Yr

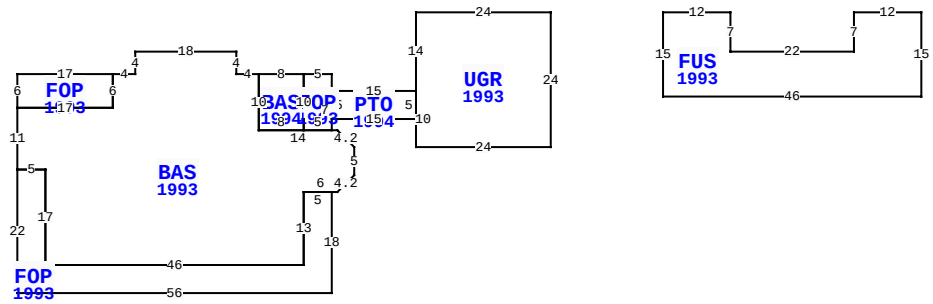

55030 DEER RUN RD, CALLAHAN

BLD DATE		LGL DATE	
XF DATE		LAND DATE	
INC DATE		AG DATE	

VALUATION SUMMARY

VALUATION BY	STANDARD
Tax Group: 6	Tax Dist:
BUILDING MARKET VALUE	303,936
TOTAL MARKET OB/XF VALUE	8,012
TOTAL LAND VALUE - MARKET	50,000
TOTAL MARKET VALUE	361,948
SOH/AGL Deduction	56,342
ASSESSED VALUE	305,606
TOTAL EXEMPTION VALUE	0
BASE TAXABLE VALUE	305,606
TOTAL JUST VALUE	361,948
NCON VALUE	0
INCOME VALUE	
PREVIOUS YEAR MKT VALUE	285,232

PERMIT NUM	DESCRIPTION	AMT	ISSUED
6292	NEW CONSTR	100,423	02/16/1990

SALES DATA

OFF RECORD Number	DATE	TYPE INST	Q / U	V / I	RSN CD	SALE PRICE
1232/0180	5/20/2004	WD	Q	I		184,000
GRANTOR: WOOD SHELLEY J						
GRANTEE: UNDERWOOD JILL						
0687/0502	8/25/1993	WD	Q	I		126,500
GRANTOR: PEEBLES MACK & BEV						
GRANTEE: WOOD STEVEN & S J						

BUILDING NOTES

BUILDING DIMENSIONS

UGR=[YR=1993] W24 S14 PTO=[YR=1994] W15 FOP=[YR=1993] N3 W5 BAS=[YR=1994] W8 BAS=[YR=1993] W4 N4 W18 S4 W4 FOP=[YR=1993] W17 S6 E17 N6$ S6 W17 S11 FOP=[YR=1993] S22 E56 N18 W5 S13 W46 N17 W5$ E5 S17 E46 N13 E6 U3 R3 N5 L3 U3 W14 N10$S10 E8 N10$ S10 E5 N7$ S5 E15 N5$ S10E24 N24$ PTR=E20 FUS=[YR=1993] E12 S7 E22 N7 E12 S15 W46 N15$ W20$.

EXTRA FEATURES

LN	OB/XF CODE	DESCRIPTION	BLD	CAP	L	W	UNITS	UT	Adj R	ADJ UNIT PRICE	ORIG COND	YEAR ON	YEAR ACTUAL	Q	% COND	OB/XF MKT VALUE	NOTES
1	0500	FP-PRE FAB	0	0	0	0	1.00	UT	3,500.00	3,500.00	100	1990	1990	3	70	2,450	
2	0812	CONCRETE C	0	0	0	0	2,197.00	SF	4.00	4.00	100	1990	1990	3	62	5,449	
3	1076	TRELLIS A	0	0	0	0	75.00	SF	7.50	7.50	100	1994	1994	3	20	113	

LAND DESCRIPTION

TOTAL OB/XF 8,012

LN	USE CODE	CLS	LAND USE DESCRIPTION	CAP	RD	LOC ZONE	FRONT	DEPTH	TOT LND UTS	UNIT TYPE	DT	DPTH FACT	% COND	TOT ADJ	UNIT PRICE	ADJ UNIT PRICE	LAND VALUE	OTHER ADJUSTMENTS AND NOTES	YEAR	DENSITY	DECL	FRZ	YR	CONSRV
1	000100	C	SFR	0	0006	RS-1	0.00	0.00	1.00	LT		1.00	1.00	1.00	50,000.00	50,000.00	50,000							

REVIEW DATE 06/28/2017 BY KBX Total Acres: 0.00 Total Land Value: 50,000 Market: 0 Agricultural: 0 Common: 50,000 PRINTED 08/02/2023 BY SYS