LOT 130
IN OR 1930/1744
CLEAR LAKE ESTATES #1 PB 7/346

HUNT HOLLY & STEVEN
53051 BRISTA WAY
CALLAHAN, FL 32011

2023

46-2N-25-0240-0130-0000

NASSAU COUNTY PROPERTY

BUILDING CHARACTERISTICS

ELEMENT	CD	CONSTRUCTION
Exterior Wall	20	FACE BRICK 100
Roof Structur	08	IRREGULAR 100
Roof Cover	03	COMP SHNGL 100
Interior Wall	05	DRYWALL 100
Interior Floo	12	HARDWOOD 60
Interior Floo	08	SHT VINYL 40
Air Condition	03	CENTRAL 100
Heating Type	04	AIR DUCTED 100
Bedrooms		3 100
Bathrooms		2.5 100
Frame	02	WOOD FRAME 100
Stories	1.	1. 100
Units		0 100
Occupancy	00	NONE 100
Quality	03	Quality Level 03

DOR CODE 0100 SINGLE FAMILY
MAP NUM | MKT AREA 08
NEIGHBORHOOD/LOC 8015.00

AREA TYPE	TOTAL GROSS AREA	PCT OF BASE	TOT ADJ AREA	SUBAREA MARKET VALUE
BAS	2,105	100	2,105	249,594
FGR	537	55	295	34,978
FOP	168	30	50	5,929
FOP	192	30	58	6,877
FST	73	55	40	4,743
FUS	315	100	315	37,350
TOTALS	3,390		2,863	339,471

MARKET ADJUSTMENTS

TYPE	MDL	EFF. AREA	TOT ADJ PTS	EFF. BASE RATE	REPL. COST NEW	AYB	EYB	ECON	FNCT		NORM	% COND
0900	01	2,863	106.2200	126.14	361,139	2014	2014	0	0	0	6.00	94.00

1 SNGL FAM – 100% - 2015 Heated Area: 2420 HX Base Yr 2015

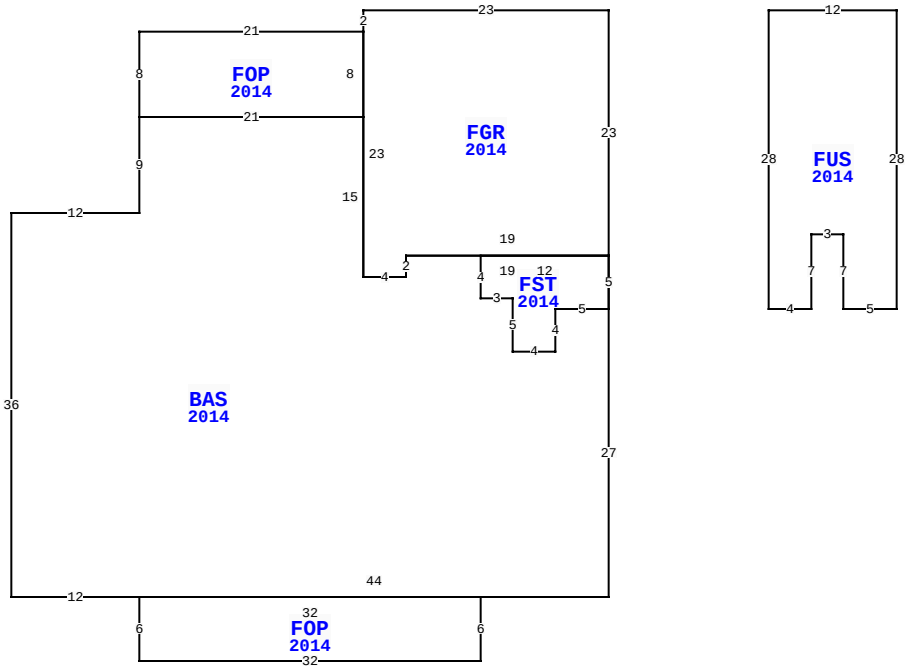

53051 BRISTA WAY, CALLAHAN

BLD DATE		LGL DATE	
XF DATE		LAND DATE	05/14/2014 MF
INC DATE		AG DATE	

VALUATION SUMMARY

VALUATION BY		STANDARD
Tax Group: 6	Tax Dist:	
BUILDING MARKET VALUE		339,471
TOTAL MARKET OB/XF VALUE		76,757
TOTAL LAND VALUE - MARKET		60,000
TOTAL MARKET VALUE		476,228
SOH/AGL Deduction		203,450
ASSESSED VALUE		272,778
TOTAL EXEMPTION VALUE	HX HB	50,000
BASE TAXABLE VALUE		222,778
TOTAL JUST VALUE		476,228
NCON VALUE		0
INCOME VALUE		
PREVIOUS YEAR MKT VALUE		361,167

PERMIT NUM	DESCRIPTION	AMT	ISSUED
19005533	XFOB	18,000	07/01/2019
19002271	SWIM POOL	65,000	04/01/2019
B1428432	CO ISSUED	0	07/01/2014
B1428432	NEW CONSTR	279,389	03/01/2014

SALES DATA

OFF RECORD Number	DATE	TYPE INST	Q U	V I	RSN CD	SALE PRICE
1930/1744	7/02/2014	WD	U	I	37	35,000
GRANTOR: GREENE KENNETH L						
GRANTEE: HUNT HOLLY & STEVEN						
1753/0771	8/18/2011	WD	U	I	12	850,000
GRANTOR: FEDERAL DEPOSIT INSUR						
GRANTEE: GREENE KENNETH I						

BUILDING NOTES

EXTRA FEATURES

LN	OB/XF CODE	DESCRIPTION	BLD	CAP	L	W	UNITS	UT	Adj R	ADJ UNIT PRICE	ORIG COND	YEAR ON	YEAR ACTUAL	Q	% COND	OB/XF MKT VALUE	NOTES
1	0811	CONCRETE B	0	100	0	0	1,806.00	SF	5.20	5.20	100	2014	2014	3	95	8,922	
2	0500	FP-PRE FAB	0	100	0	0	1.00	UT	3,500.00	3,500.00	100	2014	2014	3	97	3,395	
3	0861	POOL GUNIT	0	100	0	0	329.00	SF	85.00	85.00	100	2020	2020	3	95	26,567	
4	0855	CONC PAVER	0	100	0	0	1,261.00	SF	10.00	10.00	100	2020	2020	3	99	12,484	
5	0911	SCRN RM A	0	100	52	30	1,560.00	SF	17.50	17.50	100	2020	2020	3	93	25,389	

BUILDING DIMENSIONS

FGR=[YR=2014] W23 S2 FOP=[YR=2014] W21 S8 BAS=[YR=2014] S9 W12 S36 E12 FOP=[YR=2014] S6 E32 N6 W32$ E44 N27 FST=[YR=2014] W5 S4 W4 N5 W3 N4 E12 S5$ N5 W19 S2 W4 N15 W21$ E21 N8$ S23 E4 N2 E19 N23$ PTR=E15 FUS=[YR=2014] E12 S28 W5 N7 W3 S7 W4 N28$ W15$.

LAND DESCRIPTION

TOTAL OB/XF 76,757

LN	USE CODE	CLS	LAND USE DESCRIPTION	CAP	RD	LOC ZONE	FRONT	DEPTH	TOT LND UTS	UNIT TYPE	DT	DPTH FACT	% COND	TOT ADJ	UNIT PRICE	ADJ UNIT PRICE	LAND VALUE	OTHER ADJUSTMENTS AND NOTES	YEAR	DENSITY	DECL	FRZ	YR	CONSRV
1	000100	C	SFR	100		OR	0.00	0.00	1.00	LT		1.00	1.00	1.00	60,000.00	60,000.00	60,000							

REVIEW DATE 03/24/2021 BY KBA Total Acres: 0.00 Total Land Value: 60,000 Market: 0 Agricultural: 0 Common: 60,000 PRINTED 08/02/2023 BY SYS