LOT 99
CLEAR LAKE ESTATES #1 PB 7/346

STEPHENS WILLIAM D & CASEY E
53668 CARRINGTON DR
CALLAHAN, FL 32011

2023

46-2N-25-0240-0099-0000

NASSAU COUNTY PROPERTY

BUILDING CHARACTERISTICS

ELEMENT	CD	CONSTRUCTION
Exterior Wall	20	FACE BRICK 60
Exterior Wall	05	AVERAGE 40
Roof Structur	08	IRREGULAR 100
Roof Cover	03	COMP SHNGL 100
Interior Wall	05	DRYWALL 100
Interior Floo	11	CLAY TILE 50
Interior Floo	14	CARPET 50
Air Condition	03	CENTRAL 100
Heating Type	04	AIR DUCTED 100
Bedrooms		4 100
Bathrooms		2.5 100
Frame	02	WOOD FRAME 100
Stories	2.	2. 100
Units		0 100
Occupancy	00	NONE 100
Quality	03	Quality Level 03
DOR CODE	0100	SINGLE FAMILY
MAP NUM		MKT AREA 08
NEIGHBORHOOD/LOC	8015.00	

AREA TYPE	TOTAL GROSS AREA	PCT OF BASE	TOT ADJ AREA	SUBAREA MARKET VALUE
BAS	1,652	100	1,652	199,217
FGR	502	55	276	33,283
FOP	20	30	6	723
FUS	799	100	799	96,353
PTO	9	5	0	0
UOP	583	20	117	14,109
UST	120	45	54	6,512
TOTALS	3,685		2,904	350,199

MARKET ADJUSTMENTS

TYPE	MDL	EFF. AREA	TOT ADJ PTS	EFF. BASE RATE	REPL. COST NEW	AYB	EYB	ECON	FNCT		NORM	% COND
0900	01	2,904	108.3820	128.70	373,745	2012	2012	0	0	0	6.30	93.70

1 SNGL FAM – 0% - 0 Heated Area: 2451 HX Base Yr

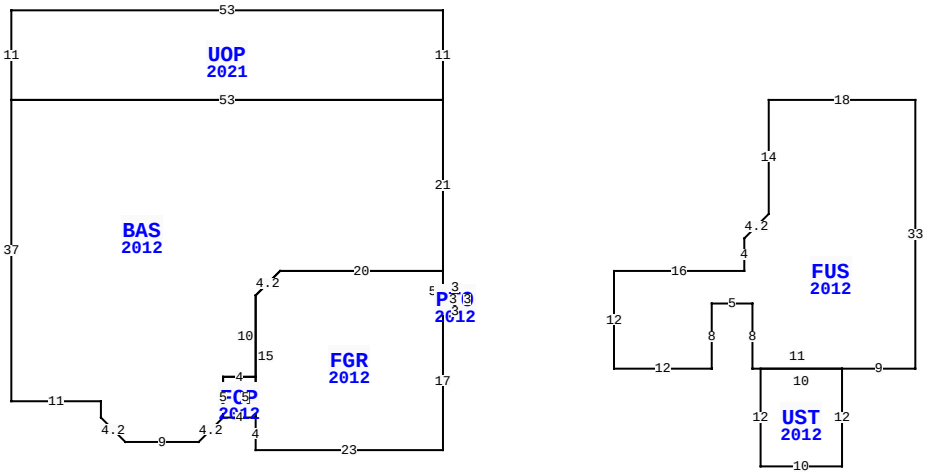

53668 CARRINGTON DR, CALLAHAN

BLD DATE		LGL DATE	
XF DATE		LAND DATE	
INC DATE		AG DATE	

VALUATION SUMMARY

VALUATION BY	STANDARD
Tax Group: 6	Tax Dist:
BUILDING MARKET VALUE	373,006
TOTAL MARKET OB/XF VALUE	121,505
TOTAL LAND VALUE - MARKET	60,000
TOTAL MARKET VALUE	554,511
SOH/AGL Deduction	170,346
ASSESSED VALUE	384,165
TOTAL EXEMPTION VALUE	0
BASE TAXABLE VALUE	384,165
TOTAL JUST VALUE	554,511
NCON VALUE	34,423
INCOME VALUE	
PREVIOUS YEAR MKT VALUE	317,947

PERMIT NUM	DESCRIPTION	AMT	ISSUED
22000019	SCRN ENCL	21,050	01/03/2022
21008342	SWIM POOL	108,030	06/24/2021
21007469	ADDITION	14,358	06/09/2021
B26462	CO ISSUED	0	12/10/2012
P1216168	NEW CONSTR	0	10/01/2012
M1217698	H/AC	0	10/01/2012

SALES DATA

OFF RECORD Number	DATE	TYPE INST	Q / U	V / I	RSN CD	SALE PRICE
2415/1959	12/04/2020	WD	Q	I	01	403,000
GRANTOR: JAHAY BRIAN & MINDA L						
GRANTEE: STEPHENS WILLIAM D						
1831/1878	12/28/2012	WD	Q	I	02	228,000
GRANTOR: GREENE KENNETH L						
GRANTEE: JAHAY BRIAN & MINDA						

BUILDING NOTES

BUILDING DIMENSIONS

BAS=[YR=2012;ORIG=0,0] W53 S37 E11 S2 D3R3 E9 U3R3 N5 E4 N10 U3R3 E20 N21 $
FUS=[YR=2012;ORIG=40,0] E18 S33 W9 W11 N8 W5 S8 W12 N12 E16 N4 U3R3 N14 $
UOP=[YR=2021;ORIG=0,0] N11 W53 S11 E53 $
FGR=[YR=2012;ORIG=-23,39] S4 E23 N17 N5 W20 D3L3 S15 $
UST=[YR=2012;ORIG=49,33] S12 W10 N12 E10 $
FOP=[YR=2012;ORIG=-27,39] E4 N5 W4 S5 $
PTO=[YR=2012;ORIG=0,26] E3 N3 W3 S3 $
PTR=[ORIG=0,0] E40 W40 $
.

EXTRA FEATURES

LN	OB/XF CODE	DESCRIPTION	BLD	CAP	L	W	UNITS	UT	Adj R	ADJ UNIT PRICE	ORIG COND	YEAR ON	YEAR ACTUAL	Q	% COND	OB/XF MKT VALUE	NOTES
1	0855	CONC PAVER	0	0	0	0	1,416.00	SF	10.00	10.00	100	2021	2021	3	100	14,160	
2	0811	CONCRETE B	0	0	0	0	1,099.00	SF	5.20	5.20	100	2012	2012	3	94	5,372	
3	0810	CONCRETE A	0	0	8	8	64.00	SF	6.50	6.50	100	2012	2012	3	94	391	
5	0812	CONCRETE C	0	0	0	0	2,450.00	SF	4.00	4.00	100	2015	2015	3	96	9,408	
6	0861	POOL GUNIT	0	0	0	0	670.00	SF	85.00	85.00	100	2021	2021	3	98	55,811	
7	0871	POOL HTR R	0	0	0	0	1.00	UT	2,000.00	2,000.00	100	2021	2021	3	97	1,940	
8	0855	CONC PAVER	0	0	14	14	196.00	SF	10.00	10.00	100	2022	2022	3	100	1,960	
9	0911	SCRN RM A	0	0	53	35	1,855.00	SF	17.50	17.50	100	2022	2022	3	100	32,463	

LAND DESCRIPTION

TOTAL OB/XF 121,505

LN	USE CODE	CLS	LAND USE DESCRIPTION	CAP	RD	LOC ZONE	FRONT	DEPTH	TOT LND UTS	UNIT TYPE	DT	DPTH FACT	% COND	TOT ADJ	UNIT PRICE	ADJ UNIT PRICE	LAND VALUE	OTHER ADJUSTMENTS AND NOTES	YEAR	DENSITY	DECL	FRZ	YR	CONSRV
1	000134	C	SFR POND	0	0006	OR	0.00	0.00	1.00	LT		1.00	1.00	1.00	60,000.00	60,000.00	60,000							

REVIEW DATE 04/01/2022 BY HS Total Acres: 0.00 Total Land Value: 60,000 Market: 0 Agricultural: 0 Common: 60,000 PRINTED 08/02/2023 BY SYS

LOT 99
CLEAR LAKE ESTATES #1 PB 7/346

STEPHENS WILLIAM D & CASEY E
53668 CARRINGTON DR
CALLAHAN, FL 32011

2023

46-2N-25-0240-0099-0000

NASSAU COUNTY PROPERTY

BUILDING CHARACTERISTICS

ELEMENT	CD	CONSTRUCTION
Exterior Wall	25	MOD METAL 100
Roof Structur	10	STEEL FRME 100
Roof Cover	12	MODULAR MT 100
Interior Wall	07	NONE 100
Interior Floo	03	CONC FINSH 100
Air Condition	03	CENTRAL 100
Heating Type	04	AIR DUCTED 100
Bedrooms		0 100
Bathrooms		0 100
Frame	05	STEEL 100
Stories	0	0 100
Units		0 100
Occupancy	00	NONE 100
Quality	06	Quality Level 06

DOR CODE	0100	SINGLE FAMILY	
MAP NUM		MKT AREA	08
NEIGHBORHOOD/LOC	8015.00		

AREA TYPE	TOTAL GROSS AREA	PCT OF BASE	TOT ADJ AREA	SUBAREA MARKET VALUE
BAS	910	100	910	22,808
TOTALS	910		910	22,807

MARKET ADJUSTMENTS

TYPE	MDL	EFF. AREA	TOT ADJ PTS	EFF. BASE RATE	REPL. COST NEW	AYB	EYB	ECON	FNCT		NORM	% COND
6500	01	910	77.0040	26.95	24,524	2015	2015	0	0	0	7.00	93.00

2 GARAGE RES – 0% - 0 Heated Area: 910 HX Base Yr

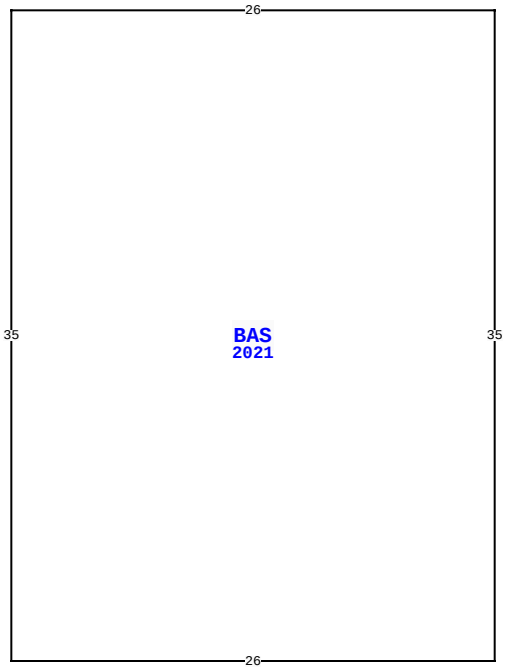

53668 CARRINGTON DR, CALLAHAN

BLD DATE		LGL DATE	
XF DATE		LAND DATE	
INC DATE		AG DATE	

VALUATION SUMMARY

VALUATION BY	STANDARD
Tax Group: 6	Tax Dist:
BUILDING MARKET VALUE	373,006
TOTAL MARKET OB/XF VALUE	121,505
TOTAL LAND VALUE - MARKET	60,000
TOTAL MARKET VALUE	554,511
SOH/AGL Deduction	170,346
ASSESSED VALUE	384,165
TOTAL EXEMPTION VALUE	0
BASE TAXABLE VALUE	384,165
TOTAL JUST VALUE	554,511
NCON VALUE	34,423
INCOME VALUE	
PREVIOUS YEAR MKT VALUE	317,947

PERMIT NUM	DESCRIPTION	AMT	ISSUED
E1225471	NEW CONSTR	0	10/01/2012
B26462	NEW CONSTR	274,158	09/03/2012

SALES DATA

OFF RECORD Number	DATE	TYPE INST	Q U /	V I /	RSN CD	SALE PRICE
2415/1959	12/04/2020	WD	Q	I	01	403,000
GRANTOR: JAHAY BRIAN & MINDA L						
GRANTEE: STEPHENS WILLIAM D						
1831/1878	12/28/2012	WD	Q	I	02	228,000
GRANTOR: GREENE KENNETH L						
GRANTEE: JAHAY BRIAN & MINDA						

BUILDING NOTES

BUILDING DIMENSIONS

BAS=[YR=2021] W26 S35 E26 N35$.

EXTRA FEATURES

LN	OB/XF CODE	DESCRIPTION	BLD	CAP	L	W	UNITS	UT	Adj R	ADJ UNIT PRICE	ORIG COND	YEAR ON	YEAR ACTUAL	Q	% COND	OB/XF MKT VALUE	NOTES

LAND DESCRIPTION

TOTAL OB/XF 0

LN	USE CODE	CLS	LAND USE DESCRIPTION	CAP	RD	LOC ZONE	FRONT	DEPTH	TOT LND UTS	UNIT TYPE	DT	DPTH FACT	% COND	TOT ADJ	UNIT PRICE	ADJ UNIT PRICE	LAND VALUE	OTHER ADJUSTMENTS AND NOTES	YEAR	DENSITY	DECL	FRZ	YR	CONSRV

REVIEW DATE 04/01/2022 BY HS Total Acres: 0.00 Total Land Value: 60,000 Market: 0 Agricultural: 0 Common: 60,000 PRINTED 08/02/2023 BY SYS