LOT 75
CLEAR LAKE ESTATES UNIT 2
PBK 8/195

SMITH SABASTIAN/
54013 CORLEY DR
CALLAHAN, FL 32011

2023

46-2N-25-0240-0075-0000

NASSAU COUNTY PROPERTY

BUILDING CHARACTERISTICS

ELEMENT	CD	CONSTRUCTION
Exterior Wall	20	FACE BRICK 100
Roof Structur	08	IRREGULAR 100
Roof Cover	03	COMP SHNGL 100
Interior Wall	05	DRYWALL 100
Interior Floo	08	SHT VINYL 100
Air Condition	03	CENTRAL 100
Heating Type	04	AIR DUCTED 100
Bedrooms		4 100
Bathrooms		3 100
Frame	02	WOOD FRAME 100
Stories	2.	2. 100
Units		0 100
Occupancy	00	NONE 100
Quality	03	Quality Level 03

DOR CODE 0100 SINGLE FAMILY
MAP NUM | MKT AREA 08
NEIGHBORHOOD/LOC 8015.100

AREA TYPE	TOTAL GROSS AREA	PCT OF BASE	TOT ADJ AREA	SUBAREA MARKET VALUE
BAS	1,705	100	1,705	209,530
FGR	536	55	295	36,254
FOP	143	30	43	5,284
FOP	155	30	46	5,653
FUS	640	100	640	78,651
STR	64	10	6	737
TOTALS	3,243		2,735	336,110

MARKET ADJUSTMENTS

TYPE	MDL	EFF. AREA	TOT ADJ PTS	EFF. BASE RATE	REPL. COST NEW	AYB	EYB	ECON	FNCT		NORM	% COND
0900	01	2,735	107.5200	127.68	349,205	2017	2017	0	0	0	3.75	96.25

1 SNGL FAM – 100% - 2018 Heated Area: 2345 HX Base Yr 2018

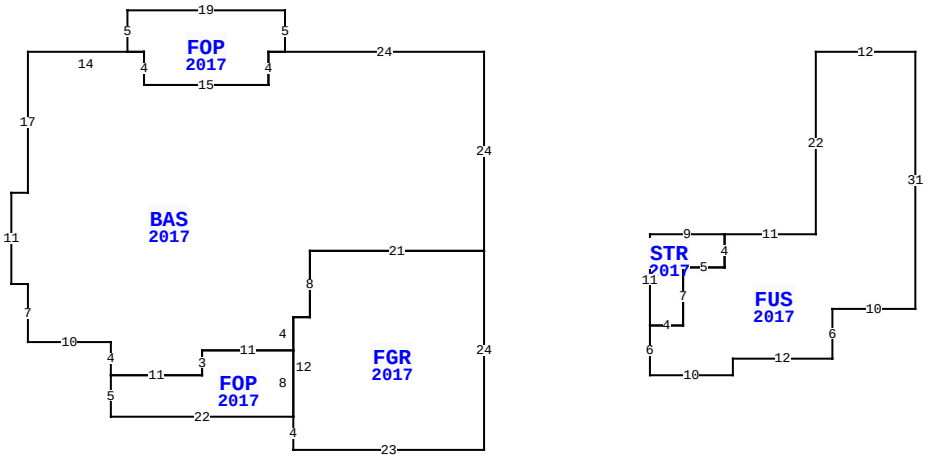

54013 CORLEY DR, CALLAHAN

BLD DATE		LGL DATE	
XF DATE		LAND DATE	
INC DATE		AG DATE	

VALUATION SUMMARY

VALUATION BY		STANDARD
Tax Group: 6	Tax Dist:	
BUILDING MARKET VALUE		336,110
TOTAL MARKET OB/XF VALUE		12,076
TOTAL LAND VALUE - MARKET		60,000
TOTAL MARKET VALUE		408,186
SOH/AGL Deduction		124,788
ASSESSED VALUE		283,398
TOTAL EXEMPTION VALUE	HX HB	50,000
BASE TAXABLE VALUE		233,398
TOTAL JUST VALUE		408,186
NCON VALUE		0
INCOME VALUE		
PREVIOUS YEAR MKT VALUE		322,410

PERMIT NUM	DESCRIPTION	AMT	ISSUED
17002455	CO ISSUED	0	11/21/2017
B172455	NEW CONSTR	299,248	05/01/2017

SALES DATA

OFF RECORD Number	DATE	TYPE INST	Q / U	V / I	RSN CD	SALE PRICE
9999/9999	12/22/2017	CN	Q	I	01	316,500

GRANTOR: GREENE KENNETH L
GRANTEE: SMITH SABASTIAN

BUILDING NOTES

BUILDING DIMENSIONS

BAS=[YR=2017] W24 FOP=[YR=2017] N5 W19 S5 E2 S4 E15 N4 E2$ W2 S4 W15 N4 W14 S17 W2 S11 E2 S7 E10 S4 FOP=[YR=2017] S5 E22 FGR=[YR=2017] S4 E23 N24 W21 S8 W2 S12$ N8 W11 S3 W11$ E11 N3 E11 N4 E2 N8 E21 N24$ PTR=E40 FUS=[YR=2017] E12 S31 W10 S6 W12 S2 W10 N6 STR=[YR=2017] N11 E9 S4 W5 S7 W4$ E4 N7 E5 N4 E11 N22$ W40$.

EXTRA FEATURES

L N	OB/XF CODE	DESCRIPTION	BLD	CAP	L	W	UNITS	UT	Adj R	ADJ UNIT PRICE	ORIG COND	YEAR ON	YEAR ACTUAL	Q	% COND	OB/XF MKT VALUE	NOTES
1	0811	CONCRETE B	0	100	0	0	1,797.00	SF	5.20	5.20	100	2017	2017	3	97	9,064	
2	0810	CONCRETE A	0	100	0	0	468.00	SF	6.50	6.50	100	2020	2020	3	99	3,012	

LAND DESCRIPTION

TOTAL OB/XF 12,076

L N	USE CODE	CLS	LAND USE DESCRIPTION	CAP	R D	LOC ZONE	FRONT	DEPTH	TOT LND UTS	UNIT TYPE	D T	DPTH FACT	% COND	TOT ADJ	UNIT PRICE	ADJ UNIT PRICE	LAND VALUE	OTHER ADJUSTMENTS AND NOTES	YEAR	DENSITY	DECL	FRZ	YR	CONSRV
1	000100	C	SFR	100			0.00	0.00	1.00	LT		1.00	1.00	1.00	60,000.00	60,000.00	60,000							

REVIEW DATE 03/25/2021 BY KBA Total Acres: 0.00 Total Land Value: 60,000 Market: 0 Agricultural: 0 Common: 60,000 PRINTED 08/02/2023 BY SYS