LOTS 47 & 48
CLEAR LAKE ESTATES UNIT 2
PBK 8/195

BOLT FAMILY LIVING TRUST/BOLT DON BOB TRUSTEE
53748 CARRINGTON DR
CALLAHAN, FL 32011

2023

46-2N-25-0240-0047-0000

BUILDING CHARACTERISTICS

ELEMENT	CD	CONSTRUCTION
Exterior Wall	20	FACE BRICK 100
Roof Structur	03	GABLE/HIP 100
Roof Cover	03	COMP SHNGL 100
Interior Wall	05	DRYWALL 100
Interior Floo	13	LVT/LAMNT 50
Interior Floo	14	CARPET 50
Air Condition	03	CENTRAL 100
Heating Type	04	AIR DUCTED 100
Bedrooms		4 100
Bathrooms		3 100
Frame	02	WOOD FRAME 100
Stories	1.	1. 100
Units		0 100
Occupancy	00	NONE 100
Quality	03	Quality Level 03
DOR CODE	0100	SINGLE FAMILY
MAP NUM		MKT AREA 08
NEIGHBORHOOD/LOC	8015.100	

AREA TYPE	TOTAL GROSS AREA	PCT OF BASE	TOT ADJ AREA	SUBAREA MARKET VALUE
BAS	2,452	100	2,452	288,257
FCP	374	25	94	11,051
FDG	918	60	551	64,776
FEP	255	80	204	23,982
FGR	770	55	424	49,845
FOP	210	30	63	7,406
TOTALS	4,979		3,788	445,317

MARKET ADJUSTMENTS

TYPE	MDL	EFF. AREA	TOT ADJ PTS	EFF. BASE RATE	REPL. COST NEW	AYB	EYB	ECON	FNCT		NORM	% COND
0900	01	3,788	99.0000	117.56	445,317	2022	2022	0	0	0	0.00	100.00

1 SNGL FAM – 100% - 2023 Heated Area: 2452 HX Base Yr 2023

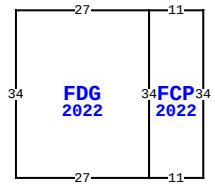

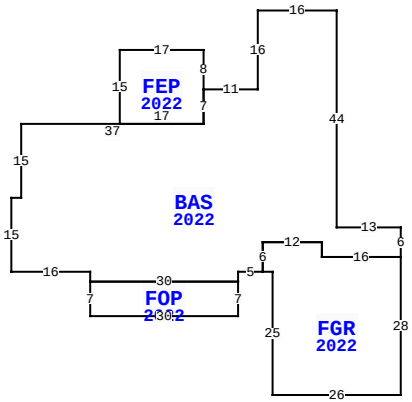

53748 CARRINGTON DR, CALLAHAN

BLD DATE		LGL DATE	
XF DATE		LAND DATE	
INC DATE		AG DATE	

NASSAU COUNTY PROPERTY

PAGE 1 of 1 6

VALUATION SUMMARY

VALUATION BY		STANDARD
Tax Group: 6	Tax Dist:	
BUILDING MARKET VALUE		445,317
TOTAL MARKET OB/XF VALUE		63,530
TOTAL LAND VALUE - MARKET		120,000
TOTAL MARKET VALUE		628,847
SOH/AGL Deduction		120,200
ASSESSED VALUE		508,647
TOTAL EXEMPTION VALUE	HX HB	50,000
BASE TAXABLE VALUE		458,647
TOTAL JUST VALUE		628,847
NCON VALUE		417,836
INCOME VALUE		
PREVIOUS YEAR MKT VALUE		120,000

PERMIT NUM	DESCRIPTION	AMT	ISSUED
22008302	SWIM POOL	58,795	05/27/2022
22006713	CO ISSUED	0	04/28/2022
21013344	NEW CONSTR	368,330	09/30/2021
21010096	GARAGE	66,253	08/02/2021

SALES DATA

OFF RECORD Number	DATE	TYPE INST	Q / U	V / I	RSN CD	SALE PRICE
2559/0860	4/29/2022	WD	Q	I	02	642,100
GRANTOR: KEN GREENE CONTRACTOR						
GRANTEE: BOLT FAMILY LIVING						
2262/1949	3/11/2019	WD	U	V	30	1,828,000
GRANTOR: GREEN KENNETH L						
GRANTEE: KEN GREENE CONTRACT						

BUILDING NOTES

BUILDING DIMENSIONS

BAS=[YR=2022] W16 S16 W11 FEP=[YR=2022] N8 W17 S15 E17 N7$ S7 W37 S15 W2 S15 E16 S2 FOP=[YR=2022] S7 E30 N7 W30$ E30 N2 E5 FGR=[YR=2022] E2 S25 E26 N28 W16 N3 W12 S6$ N6 E12 S3 E16 N6 W13 N44$ PTR= E10 N20 FDG=[YR=2022] E27 FCP=[YR=2022] E11 N34 W11 S34$ N34 W27 S34$ S20 W10$.

EXTRA FEATURES

LN	OB/XF CODE	DESCRIPTION	BLD	CAP	L	W	UNITS	UT	Adj R	ADJ UNIT PRICE	ORIG COND	YEAR ON	YEAR ACTUAL	Q	% COND	OB/XF MKT VALUE	NOTES
1	0812	CONCRETE C	0	100	0	0	4,195.00	SF	4.00	4.00	100	2022	2022	3	100	16,780	
2	0861	POOL GUNIT	0	100	24	14	336.00	SF	85.00	85.00	100	2022	2022	3	100	28,560	
3	0855	CONC PAVER	0	100	0	0	1,357.00	SF	10.00	10.00	100	2022	2022	3	100	13,570	
4	0462	ST/AL FNC	0	100	108	0	432.00	SF	10.00	10.00	100	2022	2022	3	100	4,320	
5	0463	FENCE GATE	0	100	0	0	1.00	UT	300.00	300.00	100	2022	2022	3	100	300	

LAND DESCRIPTION

TOTAL OB/XF 63,530

LN	USE CODE	CLS	LAND USE DESCRIPTION	CAP	RD	LOC ZONE	FRONT	DEPTH	TOT LND UTS	UNIT TYPE	DT	DPTH FACT	% COND	TOT ADJ	UNIT PRICE	ADJ UNIT PRICE	LAND VALUE	OTHER ADJUSTMENTS AND NOTES	YEAR	DENSITY	DECL	FRZ	YR	CONSRV
1	000134	C	SFR POND	100			0.00	0.00	2.00	LT		1.00	1.00	1.00	60,000.00	60,000.00	120,000							

REVIEW DATE 01/17/2023 BY KW Total Acres: 0.00 Total Land Value: 120,000 Market: 0 Agricultural: 0 Common: 120,000 PRINTED 08/02/2023 BY SYS