IN OR 761/1176

BRANDIES THOMAS M JR
541289 LEM TURNER ROAD
CALLAHAN, FL 32011

2023

46-2N-25-0000-0010-0020

BUILDING CHARACTERISTICS

ELEMENT	CD	CONSTRUCTION
Exterior Wall	15	CONC BLOCK 100
Roof Structur	03	GABLE/HIP 100
Roof Cover	03	COMP SHNGL 100
Interior Wall	05	DRYWALL 100
Interior Floo	14	CARPET 70
Interior Floo	11	CLAY TILE 30
Air Condition	03	CENTRAL 100
Heating Type	04	AIR DUCTED 100
Bedrooms		3 100
Bathrooms		2 100
Frame	03	MASONRY 100
Stories	1.	1. 100
Units		0 100
BUD8 Adjustme	06	DIST 1D 100
Occupancy	00	NONE 100
Quality	03	Quality Level 03
DOR CODE	0100	SINGLE FAMILY
MAP NUM		MKT AREA 08
NEIGHBORHOOD/LOC	8026.00	

AREA TYPE	TOTAL GROSS AREA	PCT OF BASE	TOT ADJ AREA	SUBAREA MARKET VALUE
BAS	72	100	72	4,860
BAS	1,536	100	1,536	103,676
FCP	780	25	195	13,162
FOP	85	30	26	1,755
FOP	528	30	158	10,665
UDG	1,664	55	915	61,761
UGR	325	45	146	9,854
TOTALS	4,990		3,048	205,733

MARKET ADJUSTMENTS

TYPE	MDL	EFF. AREA	TOT ADJ PTS	EFF. BASE RATE	REPL. COST NEW	AYB	EYB	ECON	FNCT		NORM	% COND
0100	01	3,048	94.6680	85.44	260,421	1959	1980	0	0	0	21.00	79.00

1 SINGLE FAM – 100% - 0 Heated Area: 1608 HX Base Yr

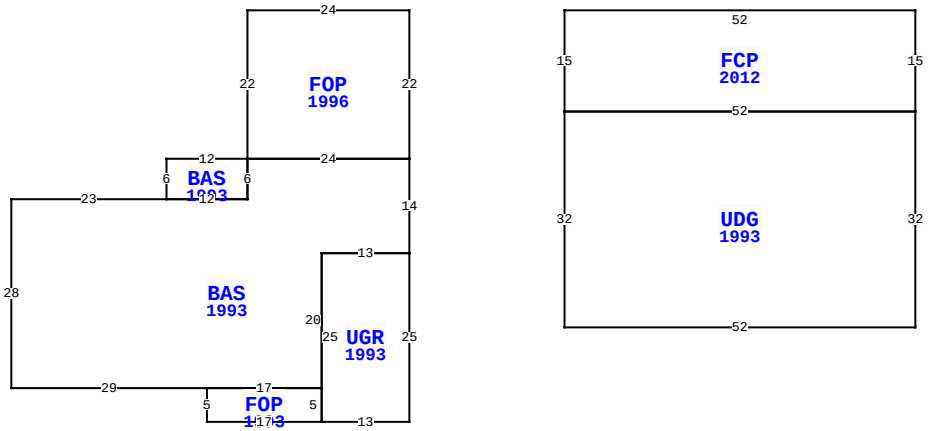

541289 LEM TURNER RD, CALLAHAN

BLD DATE		LGL DATE	
XF DATE		LAND DATE	
INC DATE		AG DATE	

NASSAU COUNTY PROPERTY

PAGE 1 of 1 6

VALUATION SUMMARY

VALUATION BY		STANDARD
Tax Group: 6	Tax Dist:	
BUILDING MARKET VALUE		205,733
TOTAL MARKET OB/XF VALUE		26,609
TOTAL LAND VALUE - MARKET		54,540
TOTAL MARKET VALUE		286,882
SOH/AGL Deduction		81,931
ASSESSED VALUE		204,951
TOTAL EXEMPTION VALUE	HX HB	50,000
BASE TAXABLE VALUE		154,951
TOTAL JUST VALUE		286,882
NCON VALUE		61,015
INCOME VALUE		
PREVIOUS YEAR MKT VALUE		222,253

PERMIT NUM	DESCRIPTION	AMT	ISSUED
20001534	REPAIR/RRF	17,650	02/02/2020
B1326992	XFOB	2,400	03/01/2013
B9603326	REPAIR/RRF	2,400	09/01/1996
8209	MH MOVE-ON	20,000	06/18/1990

SALES DATA

OFF RECORD Number	DATE	TYPE INST	Q / U	V / I	RSN CD	SALE PRICE
0761/1176	5/31/1996	WD	U	I	06	33,600
GRANTOR: BRANDIES THOMAS M JR						
GRANTEE: BRANDIES THOMAS M J						
0306/0617	12/01/1979	WD	Q	V		19,000
GRANTOR:						
GRANTEE:						

BUILDING NOTES

BUILDING DIMENSIONS

FOP=[YR=1996] W24 S22 BAS=[YR=1993] W12 S6 BAS=[YR=1993] W23 S28 E29 FOP=[YR=1993] S5 E17 UGR=[YR=1993] E13 N25 W13 S25$N5 W17$ E17 N20 E13 N14 W24 S6 W12$ E12 N6$ E24 N22$ PTR=E75 FCP=[YR=2012] W52 S15 UDG=[YR=1993] S32 E52 N32 W52$ E52 N15$W75$.

EXTRA FEATURES

LN	OB/XF CODE	DESCRIPTION	BLD	CAP	L	W	UNITS	UT	Adj R	ADJ UNIT PRICE	ORIG COND	YEAR ON	YEAR ACTUAL	Q	% COND	OB/XF MKT VALUE	NOTES
1	0680	POLE SHED	0	100	21	24	504.00	SF	15.00	15.00	100	1980	1980	3	20	1,512	
2	0811	CONCRETE B	0	100	0	0	900.00	SF	5.20	5.20	100	1980	1980	3	35	1,638	
3	0812	CONCRETE C	0	100	0	0	5,771.00	SF	4.00	4.00	100	1987	1987	3	54.5	12,581	
4	0510	GARAGE WD-	0	100	37	21	777.00	SF	35.00	35.00	100	2004	2004	3	40	10,878	

LAND DESCRIPTION

TOTAL OB/XF 26,609

LN	USE CODE	CLS	LAND USE DESCRIPTION	CAP	RD	LOC ZONE	FRONT	DEPTH	TOT LND UTS	UNIT TYPE	DT	DPTH FACT	% COND	TOT ADJ	UNIT PRICE	ADJ UNIT PRICE	LAND VALUE	OTHER ADJUSTMENTS AND NOTES	YEAR	DENSITY	DECL	FRZ	YR	CONSRV
1	000115	C	SFR ACRES	100	0004	OR	0.00	0.00	3.03	AC		1.00	1.00	1.00	18,000.00	18,000.00	54,540							

REVIEW DATE 01/14/2021 BY KWA Total Acres: 3.03 Total Land Value: 54,540 Market: 0 Agricultural: 0 Common: 54,540 PRINTED 08/02/2023 BY SYS