LOT 10
LANCEFORD PB 6/356

BOUTON GEORGE G & CHRISTINE R
96186 DOWLING DR
YULEE, FL 32097

2023

45-3N-28-121L-0010-0000

NASSAU COUNTY PROPERTY

BUILDING CHARACTERISTICS

ELEMENT	CD	CONSTRUCTION
Exterior Wall	31	HARDIE BRD 100
Roof Structur	03	GABLE/HIP 100
Roof Cover	03	COMP SHNGL 100
Interior Wall	05	DRYWALL 100
Interior Floo	14	CARPET 60
Interior Floo	12	HARDWOOD 40
Air Condition	03	CENTRAL 100
Heating Type	04	AIR DUCTED 100
Bedrooms		6 100
Bathrooms		4 100
Frame	02	WOOD FRAME 100
Stories	2.	2. 100
Units		0 100
Occupancy	00	NONE 100
Quality	04	Quality Level 04
DOR CODE	0100	SINGLE FAMILY
MAP NUM		MKT AREA 04
NEIGHBORHOOD/LOC	4026.00	

AREA TYPE	TOTAL GROSS AREA	PCT OF BASE	TOT ADJ AREA	SUBAREA MARKET VALUE
BAS	3,445	100	3,445	523,586
BAS	594	100	594	90,279
FGR	990	55	544	82,680
FOP	264	30	79	12,007
FSP	614	40	246	37,388
FUS	961	100	961	146,057
TOTALS	6,868		5,869	891,996

MARKET ADJUSTMENTS

TYPE	MDL	EFF. AREA	TOT ADJ PTS	EFF. BASE RATE	REPL. COST NEW	AYB	EYB	ECON	FNCT		NORM	% COND
0900	11	5,869	135.4320	160.83	943,911	2010	2010	0	0	0	5.50	94.50

1 SNGL FAM – 100% - 2020 Heated Area: 5000 HX Base Yr 2020

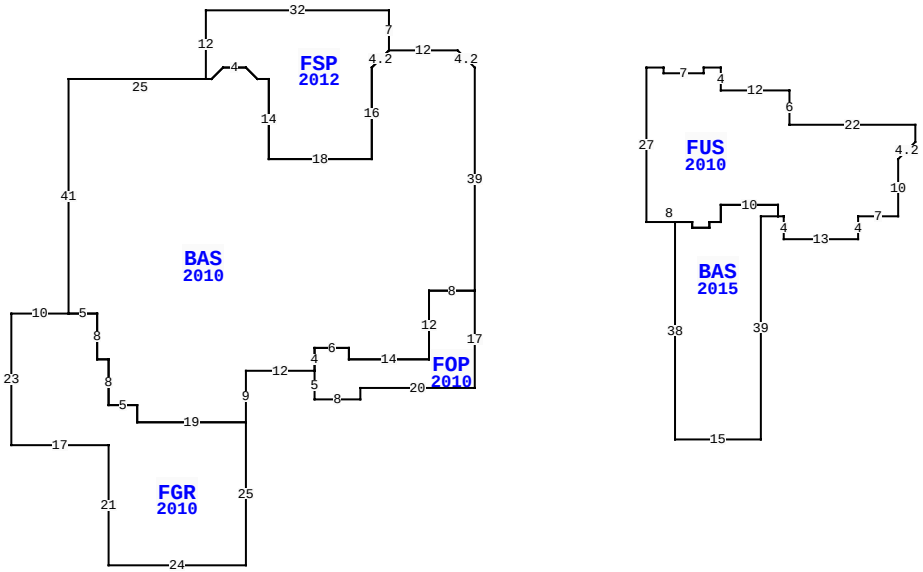

96186 DOWLING DR, YULEE

BLD DATE		LGL DATE	
XF DATE		LAND DATE	
INC DATE		AG DATE	

NASSAU COUNTY PROPERTY — VALUATION SUMMARY

VALUATION BY		STANDARD
Tax Group: 4	Tax Dist:	
BUILDING MARKET VALUE		891,996
TOTAL MARKET OB/XF VALUE		153,864
TOTAL LAND VALUE - MARKET		150,000
TOTAL MARKET VALUE		1,195,860
SOH/AGL Deduction		483,417
ASSESSED VALUE		712,443
TOTAL EXEMPTION VALUE	HX HB	50,000
BASE TAXABLE VALUE		662,443
TOTAL JUST VALUE		1,195,860
NCON VALUE		0
INCOME VALUE		
PREVIOUS YEAR MKT VALUE		833,874

PERMIT NUM	DESCRIPTION	AMT	ISSUED
B26408	SWIM POOL	15,000	09/03/2012
C23511	CO ISSUED	0	09/01/2010
G01541	GAS	1,265	06/01/2010
M15403	H/AC	0	06/01/2010
P14269	OTHER	0	05/01/2010
E22595	ELEC OTHER	0	04/01/2010

SALES DATA

OFF RECORD Number	DATE	TYPE INST	Q / U	V / I	RSN CD	SALE PRICE
2271/1732	4/30/2019	WD	Q	I	02	799,000
GRANTOR: KOLSHAK CHELSEA & BRI						
GRANTEE: BOUTON GEORGE G & C						
1922/0542	6/09/2014	WD	Q	I	01	650,000
GRANTOR: COLE WILSON DALE & AM						
GRANTEE: KOLSHAK CHELSEA & B						

BUILDING NOTES

BUILDING DIMENSIONS

BAS=[YR=2010] U3 L3 W12 FSP=[YR=2012] N7 W32 S12 E1 U2 R2 E4 D2 R2 E2 S14 E18 N16 U3 R3 $ D3 L3 S16 W18 N14 W2 U2 L2 W4 D2 L2 W25 S41 FGR=[YR=2010] W10 S23 E17 S21 E24 N25 W19 N3 W5 N8 W2 N8 W5 $ E5 S8 E2 S8 E5 S3 E19 N9 E12 FOP=[YR=2010] S5 E8 N2 E20 N17 W8 S12 W14 N2 W6 S4 $ N4 E6 S2 E14 N12 E8 N39 $ PTR= E30 FUS=[YR=2010] E3 S1 E7 N1 E3 S4 E12 S6 E22 S3 D3 L3 S10 W7 S4 W13 N4 W1 BAS=[YR=2015] W3 S39 W15 N38 E3 S1 E3 N1 E2 N3 E10 S2 $ N2 W10 S3 W2 S1 W3 N1 W8 N27 $ W30 $.

EXTRA FEATURES

LN	OB/XF CODE	DESCRIPTION	BLD	CAP	L	W	UNITS	UT	Adj R	ADJ UNIT PRICE	ORIG COND	YEAR ON	YEAR ACTUAL	Q	% COND	OB/XF MKT VALUE	NOTES
1	0500	FP-PRE FAB	0	100	0	0	3.00	UT	3,500.00	3,500.00	100	2010	2010	3	94	9,870	
2	0812	CONCRETE C	0	100	0	0	2,686.00	SF	4.00	4.00	100	2010	2010	3	92	9,884	
3	0462	ST/AL FNC	0	100	0	0	1,416.00	SF	10.00	10.00	100	2012	2012	3	71	10,054	
4	0855	CONC PAVER	0	100	0	0	1,754.00	SF	10.00	10.00	100	2012	2012	3	94	16,488	
5	0303	FLT DOCK W	0	100	10	20	200.00	SF	26.00	26.00	100	2012	2012	3	71	3,692	
6	0317	DCK PLNG W	0	100	0	0	2.00	UT	500.00	500.00	100	2012	2012	3	60	600	
7	0861	POOL GUNIT	0	100	0	0	651.00	SF	85.00	85.00	100	2012	2012	3	71	39,288	
8	0300	BOAT DCK W	0	100	250	5	1,250.00	SF	40.00	40.00	100	2012	2012	3	71	35,500	
9	0350	CARPORT WD	0	100	16	15	240.00	SF	13.00	13.00	100	2012	2012	3	60	1,872	
10	0310	AL GANG WY	0	100	0	0	14.00	LF	115.00	115.00	100	2012	2012	3	60	966	

TOTAL OB/XF 128,214

LAND DESCRIPTION

LN	USE CODE	CLS	LAND USE DESCRIPTION	CAP	RD	LOC ZONE	FRONT	DEPTH	TOT LND UTS	UNIT TYPE	DT	DPTH FACT	% COND	TOT ADJ	UNIT PRICE	ADJ UNIT PRICE	LAND VALUE	OTHER ADJUSTMENTS AND NOTES	YEAR	DENSITY	DECL	FRZ	YR	CONSRV
1	000116	C	SFR MARSH	100		RS-1	100.00	308.00	100.00	FF		1.00	1.00	1.00	1,500.00	1,500.00	150,000							

REVIEW DATE 01/19/2023 BY DJA Total Acres: 0.00 Total Land Value: 150,000 Market: 0 Agricultural: 0 Common: 150,000 PRINTED 08/02/2023 BY SYS

LOT 10
LANCEFORD PB 6/356

BOUTON GEORGE G & CHRISTINE R
96186 DOWLING DR
YULEE, FL 32097

2023

45-3N-28-121L-0010-0000

BUILDING CHARACTERISTICS

ELEMENT	CD	CONSTRUCTION

DOR CODE	0100	SINGLE FAMILY	
MAP NUM		MKT AREA	04
NEIGHBORHOOD/LOC	4026.00		

AREA TYPE	TOTAL GROSS AREA	PCT OF BASE	TOT ADJ AREA	SUBAREA MARKET VALUE
TOTALS				

MARKET ADJUSTMENTS

TYPE	MDL	EFF. AREA	TOT ADJ PTS	EFF. BASE RATE	REPL. COST NEW	AYB	EYB	ECON	FNCT		NORM	% COND

BLD DATE		LGL DATE	
XF DATE		LAND DATE	
INC DATE		AG DATE	

NASSAU COUNTY PROPERTY

PAGE 2 of 2 4

VALUATION SUMMARY

VALUATION BY		STANDARD
Tax Group: 4	Tax Dist:	
BUILDING MARKET VALUE		891,996
TOTAL MARKET OB/XF VALUE		153,864
TOTAL LAND VALUE - MARKET		150,000
TOTAL MARKET VALUE		1,195,860
SOH/AGL Deduction		483,417
ASSESSED VALUE		712,443
TOTAL EXEMPTION VALUE	HX HB	50,000
BASE TAXABLE VALUE		662,443
TOTAL JUST VALUE		1,195,860
NCON VALUE		0
INCOME VALUE		
PREVIOUS YEAR MKT VALUE		833,874

PERMIT NUM	DESCRIPTION	AMT	ISSUED
B23511	NEW CONSTR	585,545	04/01/2010

SALES DATA

OFF RECORD Number	DATE	TYPE INST	Q / U	V / I	RSN CD	SALE PRICE
2271/1732	4/30/2019	WD	Q	I	02	799,000
GRANTOR: KOLSHAK CHELSEA & BRI						
GRANTEE: BOUTON GEORGE G & C						
1922/0542	6/09/2014	WD	Q	I	01	650,000
GRANTOR: COLE WILSON DALE & AM						
GRANTEE: KOLSHAK CHELSEA & B						

BUILDING NOTES

BUILDING DIMENSIONS

EXTRA FEATURES

LN	OB/XF CODE	DESCRIPTION	BLD	CAP	L	W	UNITS	UT	Adj R	ADJ UNIT PRICE	ORIG COND	YEAR ON	YEAR ACTUAL	Q	% COND	OB/XF MKT VALUE	NOTES
11	0600	SUMMER KIT	0	100	0	0	1.00	UT	5,000.00	5,000.00	100	2012	2012	3	60	3,000	
12	0871	POOL HTR R	0	100	0	0	1.00	UT	2,000.00	2,000.00	100	2012	2012	3	60	1,200	
13	0920	CWALL-WD/M	0	100	0	0	110.00	LF	390.00	390.00	100	2010	2010	3	50	21,450	

LAND DESCRIPTION

TOTAL OB/XF 25,650

LN	USE CODE	CLS	LAND USE DESCRIPTION	CAP	RD	LOC ZONE	FRONT	DEPTH	TOT LND UTS	UNIT TYPE	DT	DPTH FACT	% COND	TOT ADJ	UNIT PRICE	ADJ UNIT PRICE	LAND VALUE	OTHER ADJUSTMENTS AND NOTES	YEAR	DENSITY	DECL	FRZ	YR	CONSRV

REVIEW DATE 01/19/2023 BY DJA Total Acres: 0.00 Total Land Value: 150,000 Market: 0 Agricultural: 0 Common: 150,000 PRINTED 08/02/2023 BY SYS