BLOCK 3 LOT 8
IN OR 1601/1000
SPRING HILL SUB UNIT 2 PB 5/35

SHERMAN GLORIA JUANITA
95528 SPRING HILL ROAD SOUTH
FERNANDINA BEACH, FL 32034

2023

45-2N-28-550B-0003-0080

NASSAU COUNTY PROPERTY

BUILDING CHARACTERISTICS

ELEMENT	CD	CONSTRUCTION
Exterior Wall	12	CEDAR 100
Roof Structur	03	GABLE/HIP 100
Roof Cover	03	COMP SHNGL 100
Interior Wall	05	DRYWALL 100
Interior Floo	14	CARPET 80
Interior Floo	08	SHT VINYL 20
Air Condition	03	CENTRAL 100
Heating Type	04	AIR DUCTED 100
Bedrooms		3 100
Bathrooms		2.5 100
Frame	02	WOOD FRAME 100
Stories	1.	1. 100
Units		0 100
Occupancy	00	NONE 100
Quality	06	Quality Level 06
DOR CODE	0100	SINGLE FAMILY
MAP NUM		MKT AREA 04
NEIGHBORHOOD/LOC	4004.00	

AREA TYPE	TOTAL GROSS AREA	PCT OF BASE	TOT ADJ AREA	SUBAREA MARKET VALUE
BAS	2,246	100	2,246	210,530
DCK	612	10	61	5,718
FGR	486	55	267	25,028
FOP	120	30	36	3,374
TOTALS	3,464		2,610	244,650

MARKET ADJUSTMENTS

TYPE	MDL	EFF. AREA	TOT ADJ PTS	EFF. BASE RATE	REPL. COST NEW	AYB	EYB	ECON	FNCT		NORM	% COND
0100	01	2,610	123.6480	111.59	291,250	1990	1990	0	0	0	16.00	84.00

1 SINGLE FAM – 100% - 1992 Heated Area: 2246 HX Base Yr 1992

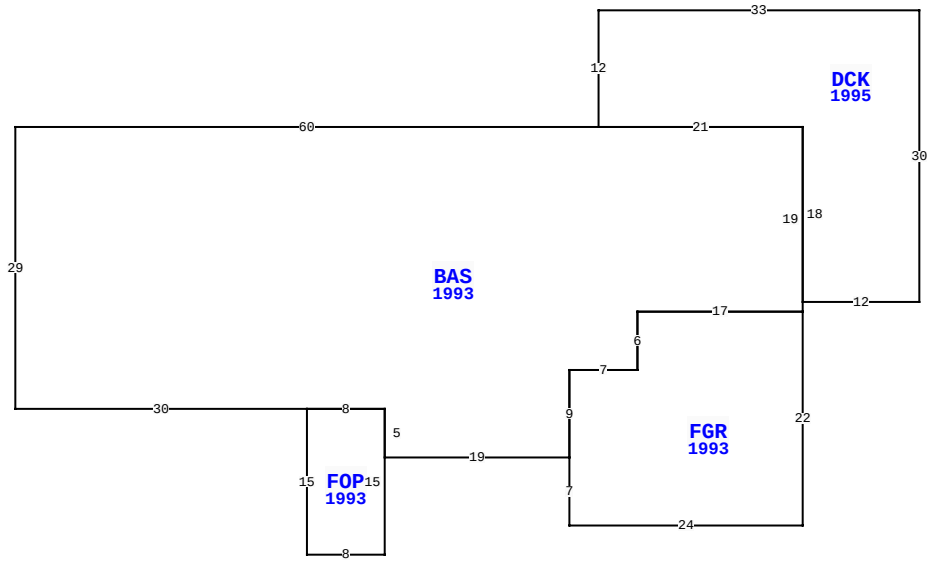

95528 SPRINGHILL RD, FERNANDINA BEACH

BLD DATE		LGL DATE	
XF DATE		LAND DATE	05/26/2023 MLU
INC DATE		AG DATE	

VALUATION SUMMARY

VALUATION BY		STANDARD
Tax Group: 4	Tax Dist:	
BUILDING MARKET VALUE		244,650
TOTAL MARKET OB/XF VALUE		7,396
TOTAL LAND VALUE - MARKET		85,000
TOTAL MARKET VALUE		337,046
SOH/AGL Deduction		177,806
ASSESSED VALUE		159,240
TOTAL EXEMPTION VALUE	HX HB	50,000
BASE TAXABLE VALUE		109,240
TOTAL JUST VALUE		337,046
NCON VALUE		0
INCOME VALUE		
PREVIOUS YEAR MKT VALUE		258,148

PERMIT NUM	DESCRIPTION	AMT	ISSUED
6770	NEW CONSTR	26,100	10/03/1990
6288	NEW CONSTR	3,500	11/06/1989
4420	N/A	51,245	10/07/1987

SALES DATA

OFF RECORD Number	DATE	TYPE INST	Q U	V I	RSN CD	SALE PRICE
1601/1000	11/25/2008	QC	U	I	07	100
GRANTOR: SHERMAN GARY D						
GRANTEE: SHERMAN GLORIA J						
1594/1953	12/01/2008	QC	U	I	01	100
GRANTOR: SHERMAN GARY D						
GRANTEE: SHERMAN GLORIA J						

BUILDING NOTES

BUILDING DIMENSIONS

DCK=[YR=1995] W33 S12 BAS=[YR=1993] W60 S29 E30 FOP=[YR=1993] S15 E8 N15 W8$ E8S5 E19 FGR=[YR=1993] S7 E24 N22 W17 S6 W7 S9$ N9 E7 N6 E17 N19 W21$ E21 S18 E12 N30$.

EXTRA FEATURES

LN	OB/XF CODE	DESCRIPTION	BLD	CAP	L	W	UNITS	UT	Adj R	ADJ UNIT PRICE	ORIG COND	YEAR ON	YEAR ACTUAL	Q	% COND	OB/XF MKT VALUE	NOTES
2	0812	CONCRETE C	0	100	0	0	800.00	SF	4.00	4.00	100	1998	1998	3	77	2,464	
3	0851	PATIO STON	0	100	0	0	159.00	SF	0.75	0.75	100	1999	1999	3	79	94	
4	0510	GARAGE WD-	0	100	24	24	576.00	SF	35.00	35.00	100	1995	1995	3	24	4,838	

LAND DESCRIPTION

TOTAL OB/XF 7,396

LN	USE CODE	CLS	LAND USE DESCRIPTION	CAP	RD	LOC ZONE	FRONT	DEPTH	TOT LND UTS	UNIT TYPE	DT	DPTH FACT	% COND	TOT ADJ	UNIT PRICE	ADJ UNIT PRICE	LAND VALUE	OTHER ADJUSTMENTS AND NOTES	YEAR	DENSITY	DECL	FRZ	YR	CONSRV
1	000100	C	SFR	100	0006	OR	0.00	0.00	1.00	LT		1.00	1.00	1.00	85,000.00	85,000.00	85,000							

REVIEW DATE 09/25/2019 BY KWA Total Acres: 0.00 Total Land Value: 85,000 Market: 0 Agricultural: 0 Common: 85,000 PRINTED 08/02/2023 BY SYS