S1/2 OF LOT 5 & ALL OF 6
IN OR 1919/1856
HOLLY POINT UNIT 1 UNR

SEIGNIOUS GEORGE W & LORI
2193 S FLETCHER AVE
FERNANDINA BEACH, FL 32034

2023

45-2N-28-525A-0005-0020

BUILDING CHARACTERISTICS

ELEMENT	CD	CONSTRUCTION
Exterior Wall	10	ABOVE AVG 100
Roof Structur	08	IRREGULAR 100
Roof Cover	03	COMP SHNGL 100
Interior Wall	05	DRYWALL 100
Interior Floo	13	LVT/LAMNT 100
Air Condition	03	CENTRAL 100
Heating Type	04	AIR DUCTED 100
Bedrooms		2 100
Bathrooms		2.5 100
Frame	02	WOOD FRAME 100
Stories	1.	1. 100
Units		0 100
Quality	06	Quality Level 06

DOR CODE 0100 SINGLE FAMILY
MAP NUM | MKT AREA 04
NEIGHBORHOOD/LOC 4003.00

AREA TYPE	TOTAL GROSS AREA	PCT OF BASE	TOT ADJ AREA	SUBAREA MARKET VALUE
BAS	2,463	100	2,463	438,980
DCK	42	10	4	713
DCK	119	10	12	2,138
FOP	216	30	65	11,585
FOP	462	30	139	24,774
STR	18	10	2	356
TOTALS	3,320		2,685	478,547

MARKET ADJUSTMENTS

TYPE	MDL	EFF. AREA	TOT ADJ PTS	EFF. BASE RATE	REPL. COST NEW	AYB	EYB	ECON	FNCT		NORM	% COND
0900	11	2,685	151.6032	180.03	483,381	2019	2019	0	0	0	1.00	99.00

1 SNGL FAM – 0% - 0 Heated Area: 2463 HX Base Yr

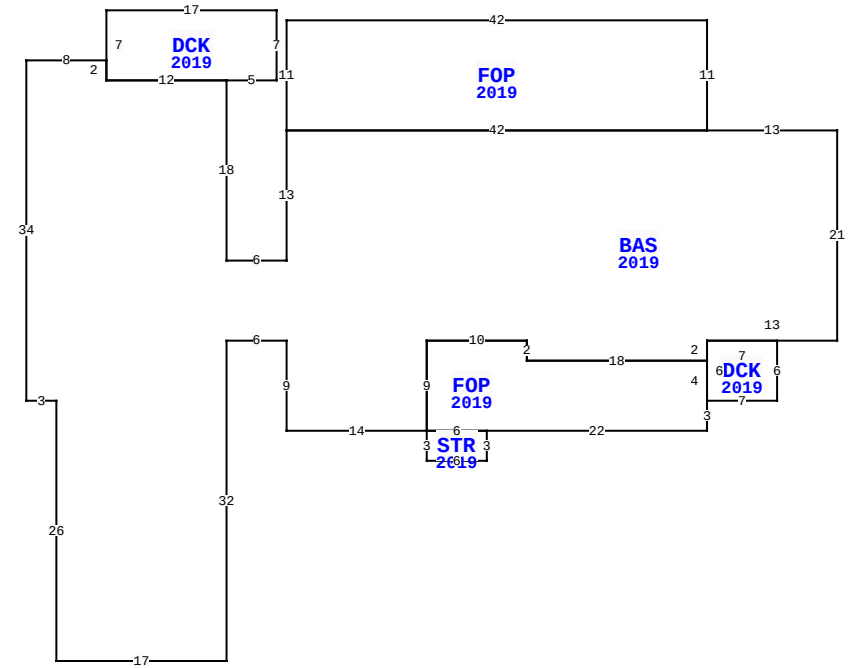

940024 OLD NASSAUVILLE RD, FERNANDINA BEACH

BLD DATE		LGL DATE	
XF DATE		LAND DATE	05/25/2023 MLU
INC DATE		AG DATE	

NASSAU COUNTY PROPERTY

PAGE 1 of 1 4

VALUATION SUMMARY

VALUATION BY	STANDARD
Tax Group: 4	Tax Dist:
BUILDING MARKET VALUE	478,547
TOTAL MARKET OB/XF VALUE	17,370
TOTAL LAND VALUE - MARKET	315,000
TOTAL MARKET VALUE	810,917
SOH/AGL Deduction	149,687
ASSESSED VALUE	661,230
TOTAL EXEMPTION VALUE	0
BASE TAXABLE VALUE	661,230
TOTAL JUST VALUE	810,917
NCON VALUE	0
INCOME VALUE	
PREVIOUS YEAR MKT VALUE	615,964

PERMIT NUM	DESCRIPTION	AMT	ISSUED
B2001481	CARPORT	13,524	03/01/2020
C1805408	CO ISSUED	0	02/01/2019
B1805408	NEW CONSTR	314,719	05/30/2018
6875	XFOB	1,000	11/30/1990

SALES DATA

OFF RECORD Number	DATE	TYPE INST	Q / U	V / I	RSN CD	SALE PRICE
1919/1856	5/28/2014	WD	Q	I	02	220,000
GRANTOR: CYR ROBERT D & MARIAN						
GRANTEE: SEIGNIOUS GEORGE W						
1256/1978	9/03/2004	WD	U	I	11	255,000
GRANTOR: JAMES RAE A						
GRANTEE: CYR ROBERT D & MARI						

BUILDING NOTES

BUILDING DIMENSIONS

BAS=[YR=2019] W13 FOP=[YR=2019] N11 W42 S11 E42$ W42 S13 W6 N18 DCK=[YR=2019] E5 N7 W17 S7 E12$ W12 N2 W8 S34 E3 S26 E17 N32 E6 S9 E14 STR=[YR=2019] S3 E6 N3 FOP=[YR=2019] E22 N3 DCK=[YR=2019] E7 N6 W7 S6$ N4 W18 N2 W10 S9 E6$ W6$ N9 E10 S2 E18 N2 E13 N21$.

EXTRA FEATURES

L N	OB/XF CODE	DESCRIPTION	BLD	CAP	L	W	UNITS	UT	Adj R	ADJ UNIT PRICE	ORIG COND	YEAR ON	YEAR ACTUAL	Q	% COND	OB/XF MKT VALUE	NOTES
4	0462	ST/AL FNC	0	0	0	0	576.00	SF	5.00	5.00	100	2008	2008	3	56	1,613	
5	0300	BOAT DCK W	0	0	0	0	195.00	SF	40.00	40.00	100	2018	2018	3	90	7,020	
6	0810	CONCRETE A	0	0	0	0	456.00	SF	6.50	6.50	100	2019	2019	3	99	2,934	
7	0350	CARPORT WD	0	0	24	20	480.00	SF	13.00	13.00	100	2020	2020	3	93	5,803	

LAND DESCRIPTION

TOTAL OB/XF 17,370

L N	USE CODE	CLS	LAND USE DESCRIPTION	CAP	R D	LOC ZONE	FRONT	DEPTH	TOT LND UTS	UNIT TYPE	D T	DPTH FACT	% COND	TOT ADJ	UNIT PRICE	ADJ UNIT PRICE	LAND VALUE	OTHER ADJUSTMENTS AND NOTES	YEAR	DENSITY	DECL	FRZ	YR	CONSRV
1	000130	C	SFR WATER	0		RM	0.00	0.00	150.00	FF		1.00	1.00	0.70	3,000.00	2,100.00	315,000							

REVIEW DATE 02/01/2019 BY KW Total Acres: 0.00 Total Land Value: 315,000 Market: 0 Agricultural: 0 Common: 315,000 PRINTED 08/02/2023 BY SYS