S 40 FT OF LOT 8 & ALL OF 9
NE 25 FT OF LOT 10
PT OR 2264/97

DOUGLAS ARTHUR B & BARBARA M FAMILY TRUST/DOUGLAS
940538 OLD NASSAUVILLE RD
FERNANDINA BEACH, FL 32034

2023

45-2N-28-5240-0008-0020

NASSAU COUNTY PROPERTY

BUILDING CHARACTERISTICS

ELEMENT	CD	CONSTRUCTION
Exterior Wall	19	COMMON BRK 90
Exterior Wall	05	AVERAGE 10
Roof Structur	03	GABLE/HIP 100
Roof Cover	12	MODULAR MT 100
Interior Wall	05	DRYWALL 100
Interior Floo	14	CARPET 60
Interior Floo	11	CLAY TILE 40
Air Condition	03	CENTRAL 100
Heating Type	04	AIR DUCTED 100
Bedrooms		3 100
Bathrooms		2 100
Frame	02	WOOD FRAME 100
Stories	1.	1. 100
Units		0 100
BUD8 Adjustme	04	DIST 01 100
Occupancy	00	NONE 100
Quality	05	Quality Level 05
DOR CODE	0100	SINGLE FAMILY
MAP NUM		MKT AREA 04
NEIGHBORHOOD/LOC	4005.00	

AREA TYPE	TOTAL GROSS AREA	PCT OF BASE	TOT ADJ AREA	SUBAREA MARKET VALUE
BAS	1,519	100	1,519	128,299
BAS	935	100	935	78,973
DCK	124	10	12	1,013
FCP	300	25	75	6,335
FEP	203	80	162	13,683
FGR	240	55	132	11,149
FSP	170	40	68	5,743
FSP	216	40	86	7,263
STP	72	10	7	591
TOTALS	3,779		2,996	253,051

MARKET ADJUSTMENTS

TYPE	MDL	EFF. AREA	TOT ADJ PTS	EFF. BASE RATE	REPL. COST NEW	AYB	EYB	ECON	FNCT		NORM	% COND
0100	01	2,996	128.7330	116.18	348,075	1967	1985	0	0	0	27.30	72.70

1 SINGLE FAM – 100% - 1993 Heated Area: 2454 HX Base Yr 1993

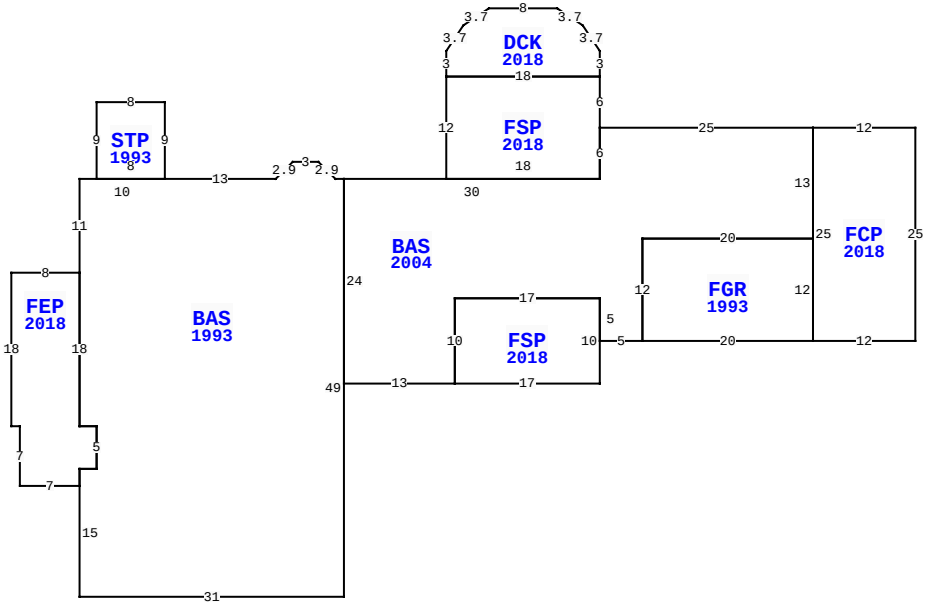

940538 OLD NASSAUVILLE RD, FERNANDINA BEACH

BLD DATE		LGL DATE	
XF DATE		LAND DATE	05/30/2023 MLU
INC DATE		AG DATE	

NASSAU COUNTY PROPERTY VALUATION SUMMARY

VALUATION BY		STANDARD
Tax Group: 4	Tax Dist:	
BUILDING MARKET VALUE		273,710
TOTAL MARKET OB/XF VALUE		51,095
TOTAL LAND VALUE - MARKET		742,000
TOTAL MARKET VALUE		1,066,805
SOH/AGL Deduction		738,545
ASSESSED VALUE		328,260
TOTAL EXEMPTION VALUE	HX HB	50,000
BASE TAXABLE VALUE		278,260
TOTAL JUST VALUE		1,066,805
NCON VALUE		0
INCOME VALUE		
PREVIOUS YEAR MKT VALUE		888,630

PERMIT NUM	DESCRIPTION	AMT	ISSUED
7851	REPAIR/RRF	1,500	02/17/1992
5945	CHNGE SRVC	75	05/23/1989

SALES DATA

OFF RECORD Number	DATE	TYPE INST	Q / U	V / I	RSN CD	SALE PRICE
2264/0097	3/22/2019	WD	U	I	11	100
GRANTOR: DOUGLAS ARTHUR B & BA						
GRANTEE: DOUGLAS ARTHUR B &						
0653/0438	3/30/1992	WD	U	I	01	60,000
GRANTOR: PICKNEY JAMES & K						
GRANTEE: DOUGLAS ART & B						

BUILDING NOTES

EXTRA FEATURES

LN	OB/XF CODE	DESCRIPTION	BLD	CAP	L	W	UNITS	UT	Adj R	ADJ UNIT PRICE	ORIG COND	YEAR ON	YEAR ACTUAL	Q	% COND	OB/XF MKT VALUE	NOTES
2	0812	CONCRETE C	0	100	0	0	7,681.00	SF	4.00	4.00	100	2003	2003	3	84	25,808	
3	0820	WOOD WALK	0	100	0	0	645.00	SF	11.75	11.75	100	2003	2003	3	40	3,032	
4	0300	BOAT DCK W	0	100	0	0	392.00	SF	40.00	40.00	100	2003	2003	3	36	5,645	
5	0510	GARAGE WD-	0	100	22	20	440.00	SF	35.00	35.00	100	1990	1990	3	20	3,080	
6	0920	CWALL-WD/M	0	100	0	0	75.00	LF	390.00	390.00	100	1995	1995	3	20	5,850	
7	0476	VF 6 SBPL	0	100	0	0	250.00	LF	32.00	32.00	100	2019	2019	3	96	7,680	

BUILDING DIMENSIONS

FCP=[YR=2018] W12 BAS=[YR=2004] W25 FSP=[YR=2018] N6 DCK=[YR=2018] N3 U3 L2 U2 L3 W8 L3 D2 D3 L2 S3 E18$ W18 S12 E18 N6$ S6 W30 BAS=[YR=1993] W1 U2 L2 W3 L2 D2 W13 STP=[YR=1993] N9 W8 S9 E8$ W10 S11 FEP=[YR=2018] W8 S18 E1 S7 E7 N2 E2 N5 W2 N18$ S18 E2 S5 W2 S15 E31 N49$ S24 E13 FSP=[YR=2018] E17 N10 W17 S10$ N10 E17 S5 E5 FGR=[YR=1993] E20 N12 W20S12$ N12 E20 N13$ S25 E12 N25$.

LAND DESCRIPTION

TOTAL OB/XF 51,095

LN	USE CODE	CLS	LAND USE DESCRIPTION	CAP	RD	LOC ZONE	FRONT	DEPTH	TOT LND UTS	UNIT TYPE	DT	DPTH FACT	% COND	TOT ADJ	UNIT PRICE	ADJ UNIT PRICE	LAND VALUE	OTHER ADJUSTMENTS AND NOTES	YEAR	DENSITY	DECL	FRZ	YR	CONSRV
1	000130	C	SFR WATER	100		RS-1	265.00	430.00	265.00	FF		1.00	1.00	0.80	3,500.00	2,800.00	742,000							

REVIEW DATE 05/10/2019 BY KW Total Acres: 0.00 Total Land Value: 742,000 Market: 0 Agricultural: 0 Common: 742,000 PRINTED 08/02/2023 BY SYS

S 40 FT OF LOT 8 & ALL OF 9
NE 25 FT OF LOT 10
PT OR 2264/97

DOUGLAS ARTHUR B & BARBARA M FAMILY TRUST/DOUGLAS
940538 OLD NASSAUVILLE RD
FERNANDINA BEACH, FL 32034

2023

45-2N-28-5240-0008-0020

NASSAU COUNTY PROPERTY

BUILDING CHARACTERISTICS

ELEMENT	CD	CONSTRUCTION
Exterior Wall	01	MINIMUM 100
Roof Structur	03	GABLE/HIP 100
Roof Cover	12	MODULAR MT 100
Interior Wall	04	PLYWOOD 100
Interior Floo	08	SHT VINYL 50
Interior Floo	13	LVT/LAMNT 50
Air Condition	03	CENTRAL 100
Heating Type	04	AIR DUCTED 100
Bedrooms		1 100
Bathrooms		1 100
Frame		N/A 100
Stories	1.	1. 100
Units		0 100
BUD8 Adjustme	04	DIST 01 100
Occupancy	00	NONE 100
Quality	01	Quality Level 01
DOR CODE	0100	SINGLE FAMILY
MAP NUM		MKT AREA 04
NEIGHBORHOOD/LOC	4005.00	

AREA TYPE	TOTAL GROSS AREA	PCT OF BASE	TOT ADJ AREA	SUBAREA MARKET VALUE
BAS	1,184	100	1,184	16,583
UCP	266	20	53	743
UST	528	45	238	3,333
TOTALS	1,978		1,475	20,659

MARKET ADJUSTMENTS

TYPE	MDL	EFF. AREA	TOT ADJ PTS	EFF. BASE RATE	REPL. COST NEW	AYB	EYB	ECON	FNCT	AP	NORM	% COND
0150	01	1,475	74.7000	37.35	55,091	1987	1987	0	0	20	42.50	37.50

2 ACCESORY U – 0% - 1993 Heated Area: 1184 HX Base Yr 1993

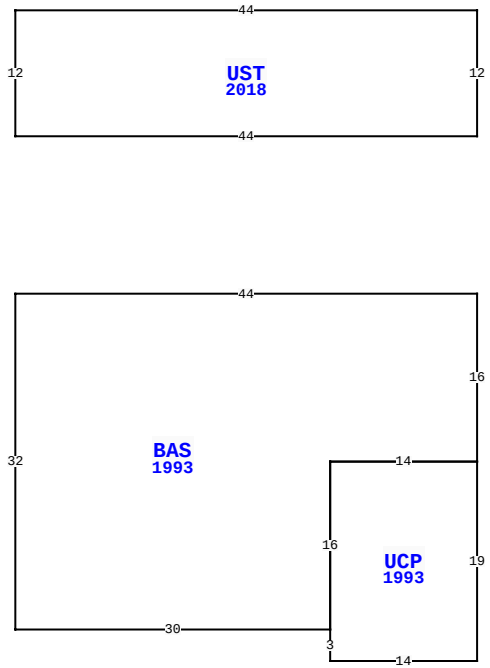

940538 OLD NASSAUVILLE RD, FERNANDINA BEACH

BLD DATE		LGL DATE	
XF DATE		LAND DATE	05/30/2023 MLU
INC DATE		AG DATE	

VALUATION SUMMARY

VALUATION BY		STANDARD
Tax Group: 4	Tax Dist:	
BUILDING MARKET VALUE		273,710
TOTAL MARKET OB/XF VALUE		51,095
TOTAL LAND VALUE - MARKET		742,000
TOTAL MARKET VALUE		1,066,805
SOH/AGL Deduction		738,545
ASSESSED VALUE		328,260
TOTAL EXEMPTION VALUE	HX HB	50,000
BASE TAXABLE VALUE		278,260
TOTAL JUST VALUE		1,066,805
NCON VALUE		0
INCOME VALUE		
PREVIOUS YEAR MKT VALUE		888,630

PERMIT NUM	DESCRIPTION	AMT	ISSUED

SALES DATA

OFF RECORD Number	DATE	TYPE INST	Q / U	V / I	RSN CD	SALE PRICE
2264/0097	3/22/2019	WD	U	I	11	100
GRANTOR: DOUGLAS ARTHUR B & BA						
GRANTEE: DOUGLAS ARTHUR B &						
0653/0438	3/30/1992	WD	U	I	01	60,000
GRANTOR: PICKNEY JAMES & K						
GRANTEE: DOUGLAS ART & B						

BUILDING NOTES

BUILDING DIMENSIONS

BAS=[YR=1993] W44 S32 E30 UCP=[YR=1993] S3 E14 N19 W14 S16$
N16 E14 N16$ PTR= N15 UST=[YR=2018] N12 W44 S12 E44$ S15 $.

EXTRA FEATURES

LN	OB/XF CODE	DESCRIPTION	BLD	CAP	L	W	UNITS	UT	Adj R	ADJ UNIT PRICE	ORIG COND	YEAR ON	YEAR ACTUAL	Q	% COND	OB/XF MKT VALUE	NOTES

LAND DESCRIPTION

TOTAL OB/XF 0

LN	USE CODE	CLS	LAND USE DESCRIPTION	CAP	RD	LOC ZONE	FRONT	DEPTH	TOT LND UTS	UNIT TYPE	DT	DPTH FACT	% COND	TOT ADJ	UNIT PRICE	ADJ UNIT PRICE	LAND VALUE	OTHER ADJUSTMENTS AND NOTES	YEAR	DENSITY	DECL	FRZ	YR	CONSRV

REVIEW DATE 05/10/2019 BY KW Total Acres: 0.00 Total Land Value: 742,000 Market: 0 Agricultural: 0 Common: 742,000 PRINTED 08/02/2023 BY SYS