BLK B {K/A PARCEL B} LOT 17
IN OR 1741/185
WILDERS SUB OF NASSAU RIVER

HAMILTON PEGGY P L/E/
95464 WILDER BLVD
FERNANDINA BEACH, FL 32034

2023

44-2N-28-5200-0017-0000

NASSAU COUNTY PROPERTY

BUILDING CHARACTERISTICS

ELEMENT	CD	CONSTRUCTION
Exterior Wall	10	ABOVE AVG 90
Exterior Wall	21	STONE 10
Roof Structur	03	GABLE/HIP 100
Roof Cover	03	COMP SHNGL 100
Interior Wall	05	DRYWALL 100
Interior Floo	13	LVT/LAMNT 100
Air Condition	03	CENTRAL 100
Heating Type	04	AIR DUCTED 100
Bedrooms		3 100
Bathrooms		3 100
Frame	02	WOOD FRAME 100
Stories	1.	1. 100
Units		0 100
Occupancy	00	NONE 100
Quality	05	Quality Level 05

DOR CODE	0100	SINGLE FAMILY	
MAP NUM		MKT AREA	04
NEIGHBORHOOD/LOC	4009.00		

AREA TYPE	TOTAL GROSS AREA	PCT OF BASE	TOT ADJ AREA	SUBAREA MARKET VALUE
BAS	2,775	100	2,775	334,489
FDG	960	60	576	69,429
FOP	30	30	9	1,084
FOP	174	30	52	6,268
FSP	760	40	304	36,643
PTO	15	5	1	120
STP	10	10	1	120
TOTALS	4,724		3,718	448,154

MARKET ADJUSTMENTS

TYPE	MDL	EFF. AREA	TOT ADJ PTS	EFF. BASE RATE	REPL. COST NEW	AYB	EYB	ECON	FNCT		NORM	% COND
0900	01	3,718	109.7910	130.38	484,753	2006	2006	0	0	0	7.55	92.45

2 SNGL FAM – 100% - 2007 Heated Area: 2775 HX Base Yr 2007

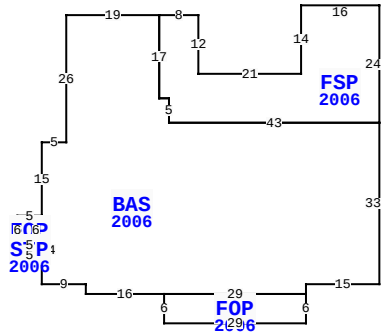

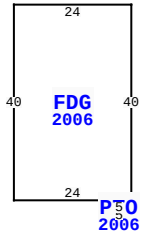

95464 WILDER BLVD, FERNANDINA BEACH

BLD DATE	03/26/2007 0	LGL DATE	05/31/2023 MLU
XF DATE		LAND DATE	
INC DATE		AG DATE	

VALUATION SUMMARY

VALUATION BY		STANDARD
Tax Group: 4	Tax Dist:	
BUILDING MARKET VALUE		448,154
TOTAL MARKET OB/XF VALUE		42,816
TOTAL LAND VALUE - MARKET		400,000
TOTAL MARKET VALUE		890,970
SOH/AGL Deduction		340,389
ASSESSED VALUE		550,581
TOTAL EXEMPTION VALUE	HX HB WX	55,000
BASE TAXABLE VALUE		495,581
TOTAL JUST VALUE		890,970
NCON VALUE		0
INCOME VALUE		
PREVIOUS YEAR MKT VALUE		713,468

PERMIT NUM	DESCRIPTION	AMT	ISSUED
M203797	H/AC	0	05/01/2020
B18611	SCRN ENCLOSURE	2,400	10/03/2006
E17824	ELEC OTHER	4,500	08/01/2006
E17825	ELEC OTHER	1,500	08/01/2006
M11937	MECH OTHER	0	08/01/2006
B17621	SWIM POOL	20,000	04/24/2006

SALES DATA

OFF RECORD Number	DATE	TYPE INST	Q U	V I	RSN CD	SALE PRICE
1741/0185	5/31/2011	WD	U	I	14	100
GRANTOR: HAMILTON JAMES D & PE						
GRANTEE: HAMILTON FAMILY TRU						
1177/1870	10/03/2003	WD	Q	V		375,000
GRANTOR: MEADOWS INCORPORATED						
GRANTEE: HAMILTON JAMES D &						

BUILDING NOTES

BUILDING DIMENSIONS

FSP=[YR=2006] W16 S14 W21 N12 W8 BAS=[YR=2006] W19 S26 W5 S15 FOP=[YR=2006] W5 S6 STP=[YR=2006] S2 E5 N2 W5 $ E5 N6 $ S14 E9 S2 E16 FOP=[YR=2006] S6 E29 N6 W29$ E29 N2 E15 N33 W43 N5 W2 N17 $ S17 E2 S5 E43 N24 $ PTR=W70 S90 FDG=[YR=2006] E24 S40 PTO=[YR=2006] S3 W5 N3 E5 $ W24 N40 $ E70 N90 $.

EXTRA FEATURES

LN	OB/XF CODE	DESCRIPTION	BLD	CAP	L	W	UNITS	UT	Adj R	ADJ UNIT PRICE	ORIG COND	YEAR ON	YEAR ACTUAL	Q	% COND	OB/XF MKT VALUE	NOTES
1	0500	FP-PRE FAB	0	100	0	0	1.00	UT	3,500.00	3,500.00	100	2006	2006	3	91	3,185	
2	0812	CONCRETE C	0	100	0	0	4,522.00	SF	4.00	4.00	100	2006	2006	3	88	15,917	
3	0300	BOAT DCK W	0	100	0	0	716.00	SF	40.00	40.00	100	2006	2006	3	48	13,747	
4	0303	FLT DOCK W	0	100	0	0	216.00	SF	0.26	0.26	100	2006	2006	3	48	27	
5	0861	POOL GUNIT	0	100	0	0	120.00	SF	85.00	85.00	100	2006	2006	3	48	4,896	
6	0871	POOL HTR R	0	100	0	0	1.00	UT	2,000.00	2,000.00	100	2006	2006	3	31	620	
7	0600	SUMMER KIT	0	100	0	0	1.00	UT	5,000.00	5,000.00	100	2006	2006	3	31	1,550	
8	0322	BOAT LFT L	0	100	0	0	1.00	UT	1,500.00	1,500.00	100	2006	2006	3	31	465	
9	0310	AL GANG WY	0	100	0	0	35.00	LF	115.00	115.00	100	2006	2006	3	31	1,248	
10	0350	CARPORT WD	0	100	24	12	288.00	SF	13.00	13.00	100	2006	2006	3	31	1,161	

TOTAL OB/XF 42,816

LAND DESCRIPTION

LN	USE CODE	CLS	LAND USE DESCRIPTION	CAP	RD	LOC ZONE	FRONT	DEPTH	TOT LND UTS	UNIT TYPE	DT	DPTH FACT	% COND	TOT ADJ	UNIT PRICE	ADJ UNIT PRICE	LAND VALUE	OTHER ADJUSTMENTS AND NOTES	YEAR	DENSITY	DECL	FRZ	YR	CONSRV
1	000132	C	SFR RIVER	100		RS-1	100.00	350.00	100.00	FF		1.00	1.00	1.00	4,000.00	4,000.00	400,000							

REVIEW DATE 04/26/2019 BY KW Total Acres: 0.00 Total Land Value: 400,000 Market: 0 Agricultural: 0 Common: 400,000 PRINTED 08/02/2023 BY SYS