PT OF TRACT A IN OR 1015/370
SEYMORE POINT ADDN #1 PBK 2/62

BENISCHECK FRANK J & MONICA COLEMAN
95167 ARBOR LN
FERNANDINA BEACH, FL 32034

2023

44-2N-28-5160-000A-0160

NASSAU COUNTY PROPERTY

BUILDING CHARACTERISTICS

ELEMENT	CD	CONSTRUCTION
Exterior Wall	19	COMMON BRK 70
Exterior Wall	15	CONC BLOCK 30
Roof Structur	03	GABLE/HIP 100
Roof Cover	03	COMP SHNGL 100
Interior Wall	05	DRYWALL 80
Interior Wall	01	MINIMUM 20
Interior Floo	12	HARDWOOD 80
Interior Floo	03	CONC FINSH 20
Air Condition	03	CENTRAL 100
Heating Type	04	AIR DUCTED 100
Bedrooms		3 100
Bathrooms		1 100
Frame	02	WOOD FRAME 100
Stories	1.	1. 100
Units		0 100
Occupancy	00	NONE 100
Quality	03	Quality Level 03

DOR CODE	0100	SINGLE FAMILY	
MAP NUM		MKT AREA	04
NEIGHBORHOOD/LOC	4009.00		

AREA TYPE	TOTAL GROSS AREA	PCT OF BASE	TOT ADJ AREA	SUBAREA MARKET VALUE
BAS	1,443	100	1,443	101,733
FOP	105	30	32	2,256
FST	384	55	211	14,876
TOTALS	1,932		1,686	118,864

MARKET ADJUSTMENTS

TYPE	MDL	EFF. AREA	TOT ADJ PTS	EFF. BASE RATE	REPL. COST NEW	AYB	EYB	ECON	FNCT		NORM	% COND
0100	01	1,686	112.4000	101.44	171,028	1955	1975	0	0	0	30.50	69.50

1 SINGLE FAM – 100% - 0 Heated Area: 1443 HX Base Yr

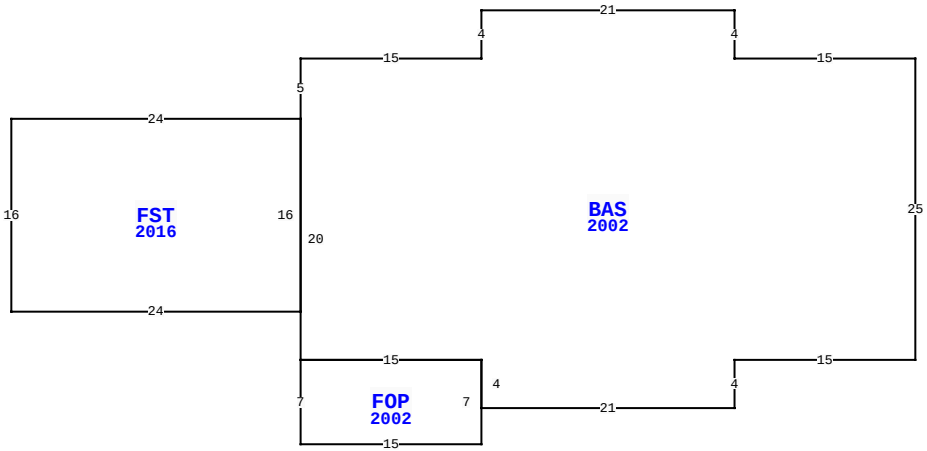

95167 ARBOR LN, FERNANDINA BEACH

BLD DATE		LGL DATE	
XF DATE		LAND DATE	
INC DATE		AG DATE	

VALUATION SUMMARY

VALUATION BY		STANDARD
Tax Group: 4	Tax Dist:	
BUILDING MARKET VALUE		118,864
TOTAL MARKET OB/XF VALUE		15,935
TOTAL LAND VALUE - MARKET		92,150
TOTAL MARKET VALUE		226,949
SOH/AGL Deduction		63,019
ASSESSED VALUE		163,930
TOTAL EXEMPTION VALUE	HX HB	50,000
BASE TAXABLE VALUE		113,930
TOTAL JUST VALUE		226,949
NCON VALUE		0
INCOME VALUE		
PREVIOUS YEAR MKT VALUE		197,538

PERMIT NUM	DESCRIPTION	AMT	ISSUED
B0108951	FOUNDATION	9,000	11/01/2001

SALES DATA

OFF RECORD Number	DATE	TYPE INST	Q / U	V / I	RSN CD	SALE PRICE
2050/0796	6/01/2016	SW	U	I	12	45,000
GRANTOR: FEDERAL NATIONAL MORT						
GRANTEE: BENISCHECK FRANK J						
1632/0592	7/21/2009	WD	Q	V	01	30,000
GRANTOR: BECKER GILBERT N						
GRANTEE: BENISCHECK FRANK J						

BUILDING NOTES

BUILDING DIMENSIONS

BAS=[YR=2002] W15 N4 W21 S4 W15 S5 FST=[YR=2016] W24 S16 E24 N16$ S20 FOP=[YR=2002] S7 E15 N7 W15$ E15 S4 E21 N4 E15 N25$
.

EXTRA FEATURES

LN	OB/XF CODE	DESCRIPTION	BLD	CAP	L	W	UNITS	UT	Adj R	ADJ UNIT PRICE	ORIG COND	YEAR ON	YEAR ACTUAL	Q	% COND	OB/XF MKT VALUE	NOTES
1	0500	FP-PRE FAB	0	100	0	0	1.00	UT	3,500.00	3,500.00	100	2002	2002	3	87	3,045	
2	0811	CONCRETE B	0	100	0	0	600.00	SF	5.20	5.20	100	2011	2011	3	93	2,902	
3	0510	GARAGE WD-	0	100	20	20	400.00	SF	35.00	35.00	100	2011	2011	3	68	9,520	
5	0810	CONCRETE A	0	100	0	0	96.00	SF	6.50	6.50	100	1997	1997	3	75	468	

LAND DESCRIPTION

TOTAL OB/XF 15,935

LN	USE CODE	CLS	LAND USE DESCRIPTION	CAP	RD	LOC ZONE	FRONT	DEPTH	TOT LND UTS	UNIT TYPE	DT	DPTH FACT	% COND	TOT ADJ	UNIT PRICE	ADJ UNIT PRICE	LAND VALUE	OTHER ADJUSTMENTS AND NOTES	YEAR	DENSITY	DECL	FRZ	YR	CONSRV
1	000100	C	SFR	100		RS-1	0.00	0.00	1.94	AC		1.00	1.00	0.95	50,000.00	47,500.00	92,150							

REVIEW DATE 12/07/2020 BY KW Total Acres: 1.94 Total Land Value: 92,150 Market: 0 Agricultural: 0 Common: 92,150 PRINTED 08/02/2023 BY SYS