PT OF LOT 2
IN OR 804/1398
SEYMORE POINT ADD 1 PB 2/62

POTTER STEPHEN C & CHERYL D
95071 NASSAU RIVER ROAD
FERNANDINA BEACH, FL 32034

**2023**

**44-2N-28-5160-0002-0020**

## BUILDING CHARACTERISTICS

| ELEMENT | CD | CONSTRUCTION |
|---|---|---|
| Exterior Wall | 10 | ABOVE AVG 100 |
| Roof Structur | 08 | IRREGULAR 100 |
| Roof Cover | 03 | COMP SHNGL 100 |
| Interior Wall | 05 | DRYWALL 100 |
| Interior Floo | 11 | CLAY TILE 50 |
| Interior Floo | 12 | HARDWOOD 50 |
| Air Condition | 03 | CENTRAL 100 |
| Heating Type | 04 | AIR DUCTED 100 |
| Bedrooms | | 4 100 |
| Bathrooms | | 3.5 100 |
| Frame | 02 | WOOD FRAME 100 |
| Stories | 2. | 2. 100 |
| Units | | 0 100 |
| BUD8 Adjustme | 04 | DIST 01 100 |
| Occupancy | 00 | NONE 100 |
| Quality | 04 | Quality Level 04 |
| DOR CODE | 0100 | SINGLE FAMILY |
| MAP NUM | | MKT AREA 04 |
| NEIGHBORHOOD/LOC | 4009.00 | |

| AREA TYPE | TOTAL GROSS AREA | PCT OF BASE | TOT ADJ AREA | SUBAREA MARKET VALUE |
|---|---|---|---|---|
| BAS | 1,884 | 100 | 1,884 | 260,321 |
| FGR | 999 | 55 | 549 | 75,858 |
| FOP | 18 | 30 | 5 | 691 |
| FOP | 40 | 30 | 12 | 1,658 |
| FOP | 111 | 30 | 33 | 4,560 |
| FOP | 360 | 30 | 108 | 14,923 |
| FSP | 510 | 40 | 204 | 28,187 |
| FUS | 1,863 | 100 | 1,863 | 257,419 |
| PTO | 16 | 5 | 1 | 138 |
| PTO | 18 | 5 | 1 | 138 |
| TOTALS | 6,478 | | 4,845 | 669,455 |

## MARKET ADJUSTMENTS

| TYPE | MDL | EFF. AREA | TOT ADJ PTS | EFF. BASE RATE | REPL. COST NEW | AYB | EYB | ECON | FNCT | | NORM | % COND |
|---|---|---|---|---|---|---|---|---|---|---|---|---|
| 0500 | 01 | 4,845 | 106.5540 | 151.84 | 735,665 | 2003 | 2003 | 0 | 0 | 0 | 9.00 | 91.00 |

1 SFR CUST – 100% - 2004 Heated Area: 3747 HX Base Yr 2004

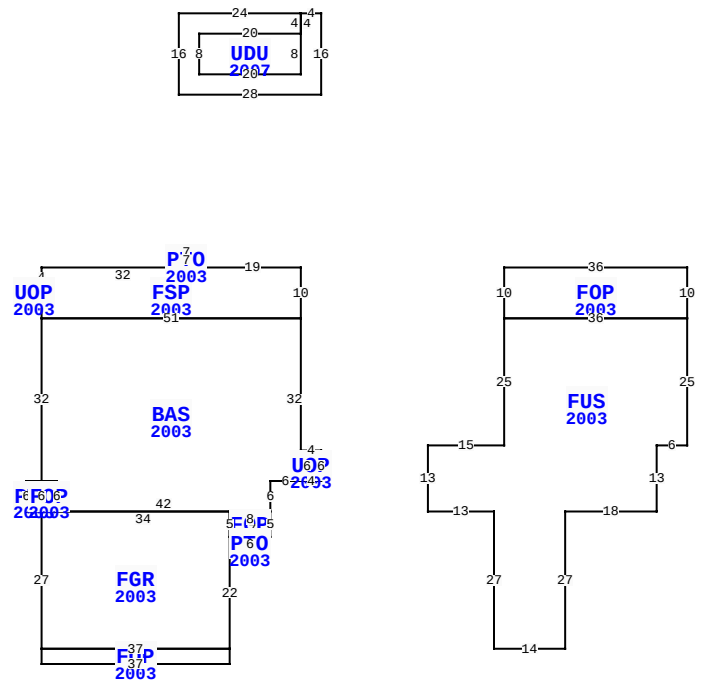


** This building has 15 Sub-Areas

95071 NASSAU RIVER RD, FERNANDINA BEACH

| | | | |
|---|---|---|---|
| BLD DATE | | LGL DATE | |
| XF DATE | | LAND DATE | 05/31/2023 MLU |
| INC DATE | | AG DATE | |

## NASSAU COUNTY PROPERTY

PAGE 1 of 2 4

### VALUATION SUMMARY

| | | |
|---|---|---|
| VALUATION BY | | STANDARD |
| Tax Group: 4 | Tax Dist: | |
| BUILDING MARKET VALUE | | 669,455 |
| TOTAL MARKET OB/XF VALUE | | 76,582 |
| TOTAL LAND VALUE - MARKET | | 352,000 |
| TOTAL MARKET VALUE | | 1,098,037 |
| SOH/AGL Deduction | | 490,183 |
| ASSESSED VALUE | | 607,854 |
| TOTAL EXEMPTION VALUE | HX HB | 50,000 |
| BASE TAXABLE VALUE | | 557,854 |
| TOTAL JUST VALUE | | 1,098,037 |
| NCON VALUE | | 0 |
| INCOME VALUE | | |
| PREVIOUS YEAR MKT VALUE | | 856,233 |

| PERMIT NUM | DESCRIPTION | AMT | ISSUED |
|---|---|---|---|
| R1707729 | REPAIR/RRF | 26,000 | 12/01/2017 |
| B21559 | POOL ENCLOSURE | 18,260 | 06/01/2008 |
| B17376 | REMODEL | 15,000 | 10/31/2006 |
| B0310825 | NEW CONSTR | 264,122 | 01/01/2003 |
| 984381 | CHNGE SRVC | 0 | 05/01/1998 |

## SALES DATA

| OFF RECORD Number | DATE | TYPE INST | Q / U | V / I | RSN CD | SALE PRICE |
|---|---|---|---|---|---|---|
| 0804/1398 | 8/28/1997 | WD | Q | I | | 139,500 |
| GRANTOR: ARETZ ELEANORE H | | | | | | |
| GRANTEE: POTTER STEPHEN C & | | | | | | |
| 0564/1249 | 3/09/1989 | WD | U | I | | 21,900 |
| GRANTOR: OELSNER EDNA LUCILLE | | | | | | |
| GRANTEE: ARETZ ELEANORE H | | | | | | |

## BUILDING NOTES

## BUILDING DIMENSIONS

FSP=[YR=2003] W19 PTO=[YR=2003] N3 W7 S3 E7 $ W32 S4 UOP=[YR=2003] W3 S2 E3 N2 $ S6 BAS=[YR=2003] S32 PTO=[YR=2003] W3 S6 E3 FGR=[YR=2003] S27 FOP=[YR=2003] S3 E37 N3 W37 $ E37 N22 FOP=[YR=2003] E1 PTO=[YR=2003] S2 E2 S2 E2 N2 E2 N2 W6 $ E7 N5 W8 S5 $ N5 W34 FOP=[YR=2003] N6 W3 S6 E3 $ W3$ N6 $ E3 S6 E42 N6 E6 UOP=[YR=2003] E4 N6 W4 S6 $ N32 W51 $ E51 N10 $ PTR= E40 FOP=[YR=2003] E36 S10 FUS=[YR=2003] S25 W6 S13 W18 S27 W14 N27 W13 N13 E15 N25 E36 $ W36 N10 $ W40 $ PTR= N50 UOP=[YR=2007] S4 UDU=[YR=2007] W20 S8 E20 N8$ N4 W24 S16 E28 N16 W4$ S50$.

## EXTRA FEATURES

| LN | OB/XF CODE | DESCRIPTION | BLD | CAP | L | W | UNITS | UT | Adj R | ADJ UNIT PRICE | ORIG COND | YEAR ON | YEAR ACTUAL | Q | % COND | OB/XF MKT VALUE | NOTES |
|---|---|---|---|---|---|---|---|---|---|---|---|---|---|---|---|---|---|
| 2 | 0300 | BOAT DCK W | 0 | 100 | 0 | 0 | 286.00 | SF | 40.00 | 40.00 | 100 | 1998 | 1998 | 3 | 27 | 3,089 | |
| 3 | 0303 | FLT DOCK W | 0 | 100 | 16 | 10 | 160.00 | SF | 26.00 | 26.00 | 100 | 1998 | 1998 | 3 | 27 | 1,123 | |
| 4 | 0310 | AL GANG WY | 0 | 100 | 0 | 0 | 24.00 | LF | 115.00 | 115.00 | 100 | 2002 | 2002 | 3 | 21 | 580 | |
| 5 | 0350 | CARPORT WD | 0 | 100 | 26 | 20 | 520.00 | SF | 13.00 | 13.00 | 100 | 2002 | 2002 | 3 | 21 | 1,420 | |
| 6 | 0322 | BOAT LFT L | 0 | 100 | 0 | 0 | 1.00 | UT | 1,500.00 | 1,500.00 | 100 | 2002 | 2002 | 3 | 21 | 315 | |
| 7 | 0812 | CONCRETE C | 0 | 100 | 0 | 0 | 3,255.00 | SF | 4.00 | 4.00 | 100 | 2003 | 2003 | 3 | 84 | 10,937 | |
| 8 | 0861 | POOL GUNIT | 0 | 100 | 0 | 0 | 418.00 | SF | 85.00 | 85.00 | 100 | 2003 | 2003 | 3 | 36 | 12,791 | |
| 9 | 0871 | POOL HTR R | 0 | 100 | 0 | 0 | 1.00 | UT | 2,000.00 | 2,000.00 | 100 | 2003 | 2003 | 3 | 22 | 440 | |
| 10 | 0504 | FP-ELECTRI | 0 | 100 | 0 | 0 | 1.00 | UT | 2,000.00 | 2,000.00 | 100 | 2003 | 2003 | 3 | 88 | 1,760 | |
| 11 | 0855 | CONC PAVER | 0 | 100 | 0 | 0 | 2,609.00 | SF | 10.00 | 10.00 | 100 | 2003 | 2003 | 3 | 84 | 21,916 | |

TOTAL OB/XF 54,371

## LAND DESCRIPTION

| LN | USE CODE | CLS | LAND USE DESCRIPTION | CAP | RD | LOC ZONE | FRONT | DEPTH | TOT LND UTS | UNIT TYPE | DT | DPTH FACT | % COND | TOT ADJ | UNIT PRICE | ADJ UNIT PRICE | LAND VALUE | OTHER ADJUSTMENTS AND NOTES | YEAR | DENSITY | DECL | FRZ | YR | CONSRV |
|---|---|---|---|---|---|---|---|---|---|---|---|---|---|---|---|---|---|---|---|---|---|---|---|---|
| 1 | 000132 | C | SFR RIVER | 100 | 0005 | RS-1 | 88.00 | 382.00 | 88.00 | FF | | 1.00 | 1.00 | 1.00 | 4,000.00 | 4,000.00 | 352,000 | | | | | | | |

REVIEW DATE 04/01/2019 BY KWA Total Acres: 0.00 Total Land Value: 352,000 Market: 0 Agricultural: 0 Common: 352,000 PRINTED 08/02/2023 BY SYS

PT OF LOT 2
IN OR 804/1398
SEYMORE POINT ADD 1 PB 2/62

POTTER STEPHEN C & CHERYL D
95071 NASSAU RIVER ROAD
FERNANDINA BEACH, FL 32034

**2023**

**44-2N-28-5160-0002-0020**

## NASSAU COUNTY PROPERTY



### BUILDING CHARACTERISTICS

| ELEMENT | CD | CONSTRUCTION |
|---|---|---|
| | | |

| | | | |
|---|---|---|---|
| DOR CODE | 0100 | SINGLE FAMILY | |
| MAP NUM | | MKT AREA | 04 |
| NEIGHBORHOOD/LOC | 4009.00 | | |

| AREA TYPE | TOTAL GROSS AREA | PCT OF BASE | TOT ADJ AREA | SUBAREA MARKET VALUE |
|---|---|---|---|---|
| TOTALS | | | | |

### MARKET ADJUSTMENTS

| TYPE | MDL | EFF. AREA | TOT ADJ PTS | EFF. BASE RATE | REPL. COST NEW | AYB | EYB | ECON | FNCT | | NORM | % COND |
|---|---|---|---|---|---|---|---|---|---|---|---|---|
| | | | | | | | | | | | | |

### VALUATION SUMMARY

| | | |
|---|---|---|
| VALUATION BY | | STANDARD |
| Tax Group: 4 | Tax Dist: | |
| BUILDING MARKET VALUE | | 669,455 |
| TOTAL MARKET OB/XF VALUE | | 76,582 |
| TOTAL LAND VALUE - MARKET | | 352,000 |
| TOTAL MARKET VALUE | | 1,098,037 |
| SOH/AGL Deduction | | 490,183 |
| ASSESSED VALUE | | 607,854 |
| TOTAL EXEMPTION VALUE | HX HB | 50,000 |
| BASE TAXABLE VALUE | | 557,854 |
| TOTAL JUST VALUE | | 1,098,037 |
| NCON VALUE | | 0 |
| INCOME VALUE | | |
| PREVIOUS YEAR MKT VALUE | | 856,233 |

| PERMIT NUM | DESCRIPTION | AMT | ISSUED |
|---|---|---|---|
| | | | |

### SALES DATA

| OFF RECORD Number | DATE | TYPE INST | Q / U | V / I | RSN CD | SALE PRICE |
|---|---|---|---|---|---|---|
| 0804/1398 | 8/28/1997 | WD | Q | I | | 139,500 |
| GRANTOR: ARETZ ELEANORE H | | | | | | |
| GRANTEE: POTTER STEPHEN C & | | | | | | |
| 0564/1249 | 3/09/1989 | WD | U | I | | 21,900 |
| GRANTOR: OELSNER EDNA LUCILLE | | | | | | |
| GRANTEE: ARETZ ELEANORE H | | | | | | |

| | | | |
|---|---|---|---|
| BLD DATE | | LGL DATE | |
| XF DATE | | LAND DATE | 05/31/2023 MLU |
| INC DATE | | AG DATE | |

### BUILDING NOTES

### BUILDING DIMENSIONS

### EXTRA FEATURES

| LN | OB/XF CODE | DESCRIPTION | BLD | CAP | L | W | UNITS | UT | Adj R | ADJ UNIT PRICE | ORIG COND | YEAR ON | YEAR ACTUAL | Q | % COND | OB/XF MKT VALUE | NOTES |
|---|---|---|---|---|---|---|---|---|---|---|---|---|---|---|---|---|---|
| 12 | 0877 | JACUZZI | 0 | 100 | 0 | 0 | 1.00 | UT | 3,000.00 | 3,000.00 | 100 | 2003 | 2003 | 3 | 22 | 660 | |
| 13 | 1127 | BRICK 8" | 0 | 100 | 0 | 0 | 261.00 | SF | 11.00 | 11.00 | 100 | 2007 | 2007 | 3 | 97 | 2,785 | |
| 14 | 0911 | SCRN RM A | 0 | 100 | 0 | 0 | 1,992.00 | SF | 17.50 | 17.50 | 100 | 2008 | 2008 | 3 | 40 | 13,944 | |
| 15 | 1127 | BRICK 8" | 0 | 100 | 82 | 3 | 246.00 | SF | 11.00 | 11.00 | 100 | 2010 | 2010 | 3 | 98 | 2,652 | |
| 16 | 0092 | AUTO GATE | 0 | 100 | 0 | 0 | 1.00 | UT | 3,500.00 | 3,500.00 | 100 | 2010 | 2010 | 3 | 50 | 1,750 | |
| 17 | 0317 | DCK PLNG W | 0 | 100 | 0 | 0 | 2.00 | UT | 1,000.00 | 1,000.00 | 100 | 2002 | 2002 | 3 | 21 | 420 | |

### LAND DESCRIPTION

TOTAL OB/XF 22,211

| LN | USE CODE | CLS | LAND USE DESCRIPTION | CAP | RD | LOC ZONE | FRONT | DEPTH | TOT LND UTS | UNIT TYPE | DT | DPTH FACT | % COND | TOT ADJ | UNIT PRICE | ADJ UNIT PRICE | LAND VALUE | OTHER ADJUSTMENTS AND NOTES | YEAR | DENSITY | DECL | FRZ | YR | CONSRV |
|---|---|---|---|---|---|---|---|---|---|---|---|---|---|---|---|---|---|---|---|---|---|---|---|---|

REVIEW DATE 04/01/2019 BY KWA Total Acres: 0.00 Total Land Value: 352,000 Market: 0 Agricultural: 0 Common: 352,000 PRINTED 08/02/2023 BY SYS