BLOCK 2 LOT 11
REPLAT SEYMORE POINT &
WILDERS SUB 2 PB 2/58

MCCRANIE DANIEL JR & ELIZABETH
95094 ARBOR LN
FERNANDINA BEACH, FL 32034

2023

44-2N-28-5140-0002-0110

NASSAU COUNTY PROPERTY

BUILDING CHARACTERISTICS

ELEMENT	CD	CONSTRUCTION
Exterior Wall	06	BD/BATTEN 100
Roof Structur	08	IRREGULAR 100
Roof Cover	03	COMP SHNGL 100
Interior Wall	05	DRYWALL 100
Interior Floo	12	HARDWOOD 70
Interior Floo	14	CARPET 30
Air Condition	03	CENTRAL 100
Heating Type	04	AIR DUCTED 100
Bedrooms		3 100
Bathrooms		2.5 100
Frame	02	WOOD FRAME 100
Stories	2.	2. 100
Units		0 100
BUD8 Adjustme	04	DIST 01 100
Occupancy	00	NONE 100
Quality	03	Quality Level 03
DOR CODE	0100	SINGLE FAMILY
MAP NUM		MKT AREA 04
NEIGHBORHOOD/LOC	4009.00	

AREA TYPE	TOTAL GROSS AREA	PCT OF BASE	TOT ADJ AREA	SUBAREA MARKET VALUE
BAS	1,264	100	1,264	151,424
BAS	352	100	352	42,168
BAS	608	100	608	72,837
DCK	307	10	31	3,714
FST	48	55	26	3,115
FUS	1,080	100	1,080	129,381
FUS	352	100	352	42,168
STR	15	10	2	239
STR	27	10	3	359
UOP	140	20	28	3,355
TOTALS	4,992		3,986	477,515

MARKET ADJUSTMENTS

TYPE	MDL	EFF. AREA	TOT ADJ PTS	EFF. BASE RATE	REPL. COST NEW	AYB	EYB	ECON	FNCT		NORM	% COND
0500	01	3,986	93.1500	132.74	529,102	1984	2009	0	0	0	9.75	90.25

1 SFR CUST – 100% - 2008 Heated Area: 3656 HX Base Yr 2008

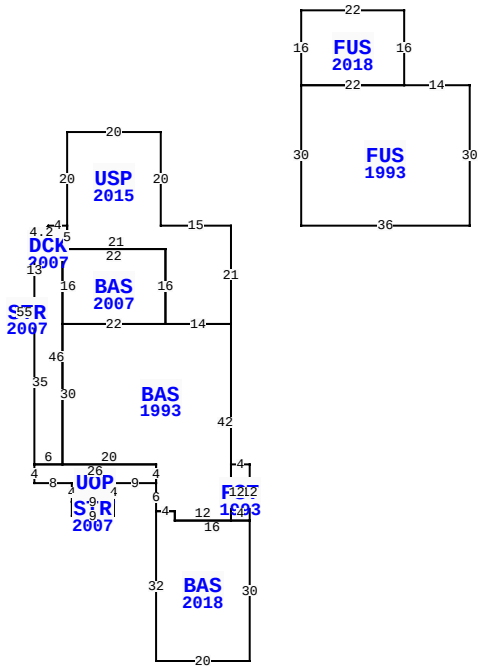

** This building has 11 Sub-Areas

95094 ARBOR LN, FERNANDINA BEACH

BLD DATE		LGL DATE	
XF DATE		LAND DATE	05/31/2023 MLU
INC DATE		AG DATE	

VALUATION SUMMARY

VALUATION BY		STANDARD
Tax Group: 4	Tax Dist:	
BUILDING MARKET VALUE		490,228
TOTAL MARKET OB/XF VALUE		46,817
TOTAL LAND VALUE - MARKET		400,000
TOTAL MARKET VALUE		937,045
SOH/AGL Deduction		275,328
ASSESSED VALUE		661,717
TOTAL EXEMPTION VALUE	HX HB	50,000
BASE TAXABLE VALUE		611,717
TOTAL JUST VALUE		937,045
NCON VALUE		0
INCOME VALUE		
PREVIOUS YEAR MKT VALUE		743,684

PERMIT NUM	DESCRIPTION	AMT	ISSUED
R1710457	REPAIR/RRF	12,000	11/01/2017
B1530940	SCRN ENCL	18,000	08/01/2015
B20246	ADDITION	50,000	07/01/2007
R0710577	REPAIR/RRF	1,500	07/01/2007
B0209237	NEW CONSTR	5,600	01/01/2002
B9704075	GARAGE	15,500	07/01/1997

SALES DATA

OFF RECORD Number	DATE	TYPE INST	Q U	V I	RSN CD	SALE PRICE
1473/0044	1/19/2007	WD	Q	I		825,000
GRANTOR: HUTCHISON DAVID A & J						
GRANTEE: MCCRANIE DANIEL I J						
0734/0398	7/18/1995	WD	U	I	01	100
GRANTOR: HUTCHISON DAVID A & J						
GRANTEE: HUTCHISON DAVID A &						

BUILDING NOTES

BUILDING DIMENSIONS

USP=[YR=2015] W15 N20 W20 S20 DCK=[YR=2007] W4 D3 L3 S13 STR=[YR=2007] W3 S5 E3 N5 $ S35 UOP=[YR=1993] S4 E8 S4 STR=[YR=2007] S3 E9 N3 W9 $ E9 N4 E9 BAS=[YR=1993] S6 BAS=[YR=2018] S32 E20 N30 FST=[YR=1993] N12 W4 S12 E4 $ W16 N2 W4 $ E4 S2 E12 N42 W14 BAS=[YR=2007] N16W22 S16 E22 $ W22 S30 E20 S4 $N4 W26 $ E6 N46 E1 N5$ S5 E21 S16 E14 N21 $ PTR= E15 FUS=[YR=1993] E36 N30 W14 FUS=[YR=2018] N16 W22 S16 E22$ W22 S30$ W15$.

EXTRA FEATURES

L N	OB/XF CODE	DESCRIPTION	BLD	CAP	L	W	UNITS	UT	Adj R	ADJ UNIT PRICE	ORIG COND	YEAR ON	YEAR ACTUAL	Q	% COND	OB/XF MKT VALUE	NOTES
1	0500	FP-PRE FAB	0	100	0	0	1.00	UT	3,500.00	3,500.00	100	1984	1984	3	58	2,030	
2	0811	CONCRETE B	0	100	0	0	996.00	SF	5.20	5.20	100	1995	1995	3	72	3,729	
4	0810	CONCRETE A	0	100	12	12	144.00	SF	6.50	6.50	100	1980	1980	3	35	328	
8	0940	SHEDS/PORT	0	100	16	12	192.00	SF	37.50	37.50	100	2004	2004	3	24	1,728	
9	0300	BOAT DCK W	0	100	0	0	984.00	SF	40.00	40.00	100	2004	2004	3	40	15,744	
10	0310	AL GANG WY	0	100	0	0	20.00	LF	115.00	115.00	100	2004	2004	3	24	552	
11	0303	FLT DOCK W	0	100	20	10	200.00	SF	26.00	26.00	100	2004	2004	3	40	2,080	
12	0317	DCK PLNG W	0	100	0	0	2.00	UT	1,000.00	1,000.00	100	2004	2004	3	24	480	
13	0323	BOAT LFT H	0	100	0	0	1.00	UT	2,500.00	2,500.00	100	2004	2004	3	24	600	
14	0317	DCK PLNG W	0	100	0	0	4.00	UT	1,000.00	1,000.00	100	2004	2004	3	24	960	

TOTAL OB/XF 28,231

LAND DESCRIPTION

L N	USE CODE	CLS	LAND USE DESCRIPTION	CAP	R D	LOC ZONE	FRONT	DEPTH	TOT LND UTS	UNIT TYPE	D T	DPTH FACT	% COND	TOT ADJ	UNIT PRICE	ADJ UNIT PRICE	LAND VALUE	OTHER ADJUSTMENTS AND NOTES	YEAR	DENSITY	DECL	FRZ	YR	CONSRV
1	000130	C	SFR WATER	100		RS-1	100.00	417.00	100.00	FF		1.00	1.00	1.00	4,000.00	4,000.00	400,000							

REVIEW DATE 11/23/2020 BY KW Total Acres: 0.00 Total Land Value: 400,000 Market: 0 Agricultural: 0 Common: 400,000 PRINTED 08/02/2023 BY SYS

BLOCK 2 LOT 11
REPLAT SEYMORE POINT &
WILDERS SUB 2 PB 2/58

MCCRANIE DANIEL JR & ELIZABETH
95094 ARBOR LN
FERNANDINA BEACH, FL 32034

2023

44-2N-28-5140-0002-0110

NASSAU COUNTY PROPERTY

BUILDING CHARACTERISTICS

ELEMENT	CD	CONSTRUCTION
Exterior Wall	11	BD/BTN AVG 100
Roof Structur	03	GABLE/HIP 100
Roof Cover	03	COMP SHNGL 100
Interior Wall	05	DRYWALL 100
Interior Floo	03	CONC FINSH 100
Air Condition	01	NONE 100
Heating Type	01	NONE 100
Bedrooms		0 100
Bathrooms		0 100
Frame	02	WOOD FRAME 100
Stories	1.	1. 100
Units		0 100
Occupancy	00	NONE 100
Quality	04	Quality Level 04
DOR CODE	0100	SINGLE FAMILY
MAP NUM		MKT AREA 04
NEIGHBORHOOD/LOC	4009.00	

AREA TYPE	TOTAL GROSS AREA	PCT OF BASE	TOT ADJ AREA	SUBAREA MARKET VALUE
BAS	576	100	576	10,897
UCP	240	20	48	908
UCP	240	20	48	908
TOTALS	1,056		672	12,713

MARKET ADJUSTMENTS

TYPE	MDL	EFF. AREA	TOT ADJ PTS	EFF. BASE RATE	REPL. COST NEW	AYB	EYB	ECON	FNCT		NORM	% COND
6500	01	672	90.0900	31.53	21,188	1997	1998	0	0	0	40.00	60.00

2 GARAGE RES – 100% - 2008 Heated Area: 576 HX Base Yr 2008

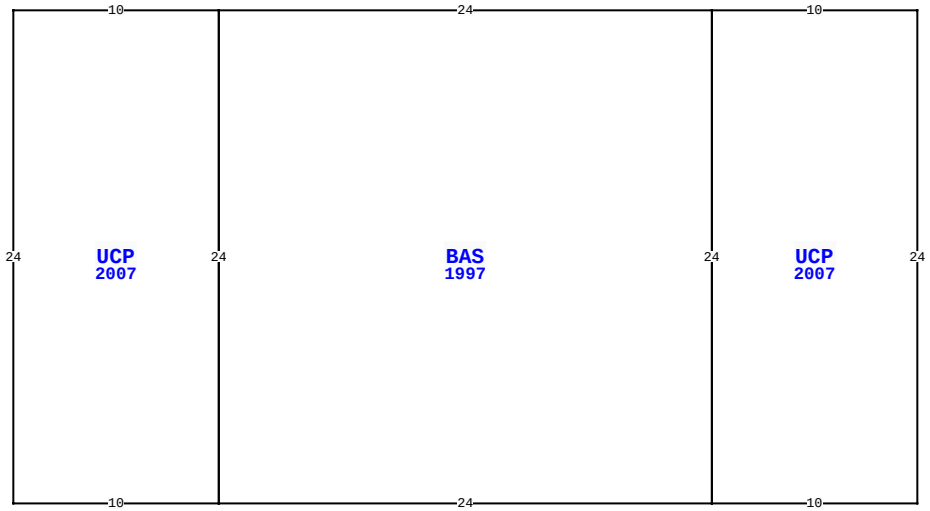

95094 ARBOR LN, FERNANDINA BEACH

BLD DATE		LGL DATE	
XF DATE		LAND DATE	05/31/2023 MLU
INC DATE		AG DATE	

VALUATION SUMMARY

VALUATION BY		STANDARD
Tax Group: 4	Tax Dist:	
BUILDING MARKET VALUE		490,228
TOTAL MARKET OB/XF VALUE		46,817
TOTAL LAND VALUE - MARKET		400,000
TOTAL MARKET VALUE		937,045
SOH/AGL Deduction		275,328
ASSESSED VALUE		661,717
TOTAL EXEMPTION VALUE	HX HB	50,000
BASE TAXABLE VALUE		611,717
TOTAL JUST VALUE		937,045
NCON VALUE		0
INCOME VALUE		
PREVIOUS YEAR MKT VALUE		743,684

PERMIT NUM	DESCRIPTION	AMT	ISSUED
4212	N/A	29,640	07/02/1987

SALES DATA

OFF RECORD Number	DATE	TYPE INST	Q / U	V / I	RSN CD	SALE PRICE
1473/0044	1/19/2007	WD	Q	I		825,000
GRANTOR: HUTCHISON DAVID A & J						
GRANTEE: MCCRANIE DANIEL I J						
0734/0398	7/18/1995	WD	U	I	01	100
GRANTOR: HUTCHISON DAVID A & J						
GRANTEE: HUTCHISON DAVID A &						

BUILDING NOTES

BUILDING DIMENSIONS

UCP=[YR=2007] W10 BAS=[YR=1997] W24 UCP=[YR=2007] W10 S24 E10 N24$ S24 E24 N24$ S24 E10 N24$.

EXTRA FEATURES

L N	OB/XF CODE	DESCRIPTION	BLD	CAP	L	W	UNITS	UT	Adj R	ADJ UNIT PRICE	ORIG COND	YEAR ON	YEAR ACTUAL	Q	% COND	OB/XF MKT VALUE	NOTES
15	0812	CONCRETE C	0	100	0	0	4,960.00	SF	4.00	4.00	100	1999	1999	3	79	15,674	
16	0350	CARPORT WD	0	100	40	28	1,120.00	SF	13.00	13.00	100	1999	1999	3	20	2,912	

LAND DESCRIPTION

TOTAL OB/XF 18,586

L N	USE CODE	CLS	LAND USE DESCRIPTION	CAP	R D	LOC ZONE	FRONT	DEPTH	TOT LND UTS	UNIT TYPE	D T	DPTH FACT	% COND	TOT ADJ	UNIT PRICE	ADJ UNIT PRICE	LAND VALUE	OTHER ADJUSTMENTS AND NOTES	YEAR	DENSITY	DECL	FRZ	YR	CONSRV

REVIEW DATE 11/23/2020 BY KW Total Acres: 0.00 Total Land Value: 400,000 Market: 0 Agricultural: 0 Common: 400,000 PRINTED 08/02/2023 BY SYS