BLK 2 LOT 8
IN OR 2003/944
TOGETHER W/MARSH RIPARIAN/

BEST EDIE
95077 SEYMORE LN
FERNANDINA BEACH, FL 32034

2023

44-2N-28-5140-0002-0080

NASSAU COUNTY PROPERTY

BUILDING CHARACTERISTICS

ELEMENT	CD	CONSTRUCTION
Exterior Wall	17	CB STUCCO 100
Roof Structur	08	IRREGULAR 100
Roof Cover	03	COMP SHNGL 100
Interior Wall	05	DRYWALL 100
Interior Floo	11	CLAY TILE 50
Interior Floo	13	LVT/LAMNT 50
Air Condition	03	CENTRAL 100
Heating Type	04	AIR DUCTED 100
Bedrooms		4 100
Bathrooms		3 100
Frame	03	MASONRY 100
Stories	1.	1. 100
Units		0 100
BUD8 Adjustme	04	DIST 01 100
Occupancy	00	NONE 100
Quality	01	Quality Level 01
DOR CODE	0100	SINGLE FAMILY
MAP NUM		MKT AREA 04
NEIGHBORHOOD/LOC	4009.00	

AREA TYPE	TOTAL GROSS AREA	PCT OF BASE	TOT ADJ AREA	SUBAREA MARKET VALUE
BAS	1,960	100	1,960	194,208
BAS	975	100	975	96,608
FCP	616	25	154	15,259
FOP	45	30	14	1,387
FOP	72	30	22	2,180
FSP	200	40	80	7,927
PTO	140	5	7	694
TOTALS	4,008		3,212	318,264

MARKET ADJUSTMENTS

TYPE	MDL	EFF. AREA	TOT ADJ PTS	EFF. BASE RATE	REPL. COST NEW	AYB	EYB	ECON	FNCT		NORM	% COND
0900	01	3,212	96.4620	114.55	367,935	1975	1995	0	0	0	13.50	86.50

1 SNGL FAM – 100% - 1997 Heated Area: 2935 HX Base Yr 1997

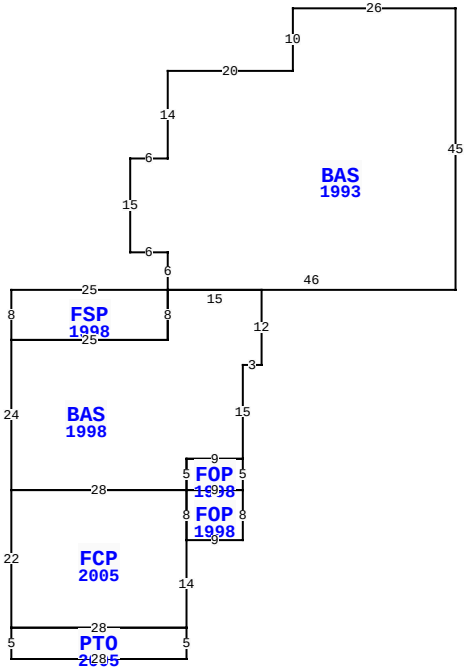

95077 SEYMORE LN, FERNANDINA BEACH

BLD DATE		LGL DATE	
XF DATE		LAND DATE	05/31/2023 MLU
INC DATE		AG DATE	

NASSAU COUNTY PROPERTY — VALUATION SUMMARY

VALUATION BY		STANDARD
Tax Group: 4	Tax Dist:	
BUILDING MARKET VALUE		318,264
TOTAL MARKET OB/XF VALUE		49,474
TOTAL LAND VALUE - MARKET		400,000
TOTAL MARKET VALUE		767,738
SOH/AGL Deduction		365,257
ASSESSED VALUE		402,481
TOTAL EXEMPTION VALUE	HX HB	50,000
BASE TAXABLE VALUE		352,481
TOTAL JUST VALUE		767,738
NCON VALUE		0
INCOME VALUE		
PREVIOUS YEAR MKT VALUE		621,900

PERMIT NUM	DESCRIPTION	AMT	ISSUED
R1706488	REPAIR/RRF	20,000	10/01/2017
B20192	ADDITION	16,800	07/01/2007
9805195	SWIM POOL	19,000	08/01/1998
984877	ADDITION	29,977	04/01/1998

SALES DATA

OFF RECORD Number	DATE	TYPE INST	Q U	V I	RSN CD	SALE PRICE
2445/1879	3/19/2021	QC	U	I	11	100
GRANTOR: SHARPE MICHAEL FRANKL						
GRANTEE: BEST EDIE AKA EDYTH						
2003/0944	6/24/2015	QC	U	I	11	100
GRANTOR: SHARPE MICHAEL F &						
GRANTEE: BEST EDIE AKA EDYTH						

BUILDING NOTES

BUILDING DIMENSIONS

BAS=[YR=1993] W26 S10 W20 S14 W6 S15 E6 S6 FSP=[YR=1998] W25 S8 BAS=[YR=1998] S24 FCP=[YR=2005] S22 PTO=[YR=2005] S5 E28 N5 W28 $ E28 N14 FOP=[YR=1998] E9 N8 FOP=[YR=1998] N5 W9 S5 E9 $ W9 S8 $ N8 W28 $ E28 N5 E9 N15 E3 N12 W15 S8 W25 $ E25 N8 $ E46 N45 $.

EXTRA FEATURES

LN	OB/XF CODE	DESCRIPTION	BLD	CAP	L	W	UNITS	UT	Adj R	ADJ UNIT PRICE	ORIG COND	YEAR ON	YEAR ACTUAL	Q	% COND	OB/XF MKT VALUE	NOTES
1	0940	SHEDS/PORT	0	100	7	20	140.00	SF	30.00	30.00	100	1980	1980	3	20	840	
3	0500	FP-PRE FAB	0	100	0	0	1.00	UT	3,500.00	3,500.00	100	1990	1990	3	70	2,450	
5	0810	CONCRETE A	0	100	19	12	228.00	SF	6.50	6.50	100	1998	1998	3	77	1,141	
6	0810	CONCRETE A	0	100	2	19	38.00	SF	6.50	6.50	100	1998	1998	3	77	190	
7	0845	KOOL DECK	0	100	0	0	1,024.00	SF	7.25	7.25	100	1998	1998	3	77	5,716	
8	0861	POOL GUNIT	0	100	16	32	512.00	SF	85.00	85.00	100	1998	1998	3	23	10,010	
9	0911	SCRN RM A	0	100	0	0	1,435.00	SF	17.50	17.50	100	2007	2007	3	35	8,789	
12	0470	VNYL GATE	0	100	0	0	2.00	UT	300.00	300.00	100	2000	2000	3	55	330	
13	0940	SHEDS/PORT	0	100	10	10	100.00	SF	18.00	18.00	100	2002	2002	3	21	378	
14	0830	FLAGSTONE	0	100	55	4	220.00	SF	12.00	12.00	100	2002	2002	3	83	2,191	

TOTAL OB/XF 32,035

LAND DESCRIPTION

LN	USE CODE	CLS	LAND USE DESCRIPTION	CAP	RD	LOC ZONE	FRONT	DEPTH	TOT LND UTS	UNIT TYPE	DT	DPTH FACT	% COND	TOT ADJ	UNIT PRICE	ADJ UNIT PRICE	LAND VALUE	OTHER ADJUSTMENTS AND NOTES	YEAR	DENSITY	DECL	FRZ	YR	CONSRV
1	000130	C	SFR WATER	100		RS-1	100.00	250.00	100.00	FF		1.00	1.00	1.00	4,000.00	4,000.00	400,000							

REVIEW DATE 06/13/2018 BY KW Total Acres: 0.00 Total Land Value: 400,000 Market: 0 Agricultural: 0 Common: 400,000 PRINTED 08/02/2023 BY SYS

BLK 2 LOT 8
IN OR 2003/944
TOGETHER W/MARSH RIPARIAN/

BEST EDIE
95077 SEYMORE LN
FERNANDINA BEACH, FL 32034

2023

44-2N-28-5140-0002-0080

NASSAU COUNTY PROPERTY

BUILDING CHARACTERISTICS

ELEMENT	CD	CONSTRUCTION

DOR CODE	0100	SINGLE FAMILY	
MAP NUM		MKT AREA	04
NEIGHBORHOOD/LOC	4009.00		

AREA TYPE	TOTAL GROSS AREA	PCT OF BASE	TOT ADJ AREA	SUBAREA MARKET VALUE
TOTALS				

MARKET ADJUSTMENTS

TYPE	MDL	EFF. AREA	TOT ADJ PTS	EFF. BASE RATE	REPL. COST NEW	AYB	EYB	ECON	FNCT		NORM	% COND

VALUATION SUMMARY

VALUATION BY		STANDARD
Tax Group: 4	Tax Dist:	
BUILDING MARKET VALUE		318,264
TOTAL MARKET OB/XF VALUE		49,474
TOTAL LAND VALUE - MARKET		400,000
TOTAL MARKET VALUE		767,738
SOH/AGL Deduction		365,257
ASSESSED VALUE		402,481
TOTAL EXEMPTION VALUE	HX HB	50,000
BASE TAXABLE VALUE		352,481
TOTAL JUST VALUE		767,738
NCON VALUE		0
INCOME VALUE		
PREVIOUS YEAR MKT VALUE		621,900

PERMIT NUM	DESCRIPTION	AMT	ISSUED

SALES DATA

OFF RECORD Number	DATE	TYPE INST	Q / U	V / I	RSN CD	SALE PRICE
2445/1879	3/19/2021	QC	U	I	11	100
GRANTOR: SHARPE MICHAEL FRANKL						
GRANTEE: BEST EDIE AKA EDYTH						
2003/0944	6/24/2015	QC	U	I	11	100
GRANTOR: SHARPE MICHAEL F &						
GRANTEE: BEST EDIE AKA EDYTH						

BLD DATE		LGL DATE	
XF DATE		LAND DATE	05/31/2023 MLU
INC DATE		AG DATE	

BUILDING NOTES

BUILDING DIMENSIONS

EXTRA FEATURES

LN	OB/XF CODE	DESCRIPTION	BLD	CAP	L	W	UNITS	UT	Adj R	ADJ UNIT PRICE	ORIG COND	YEAR ON	YEAR ACTUAL	Q	% COND	OB/XF MKT VALUE	NOTES
15	0300	BOAT DCK W	0	100	195	4	780.00	SF	40.00	40.00	100	1999	1999	3	28	8,736	
16	0311	WD GANG WY	0	100	0	0	22.00	SF	45.00	45.00	100	1999	1999	3	20	198	
17	0303	FLT DOCK W	0	100	20	8	160.00	SF	26.00	26.00	100	1999	1999	3	28	1,165	
18	0317	DCK PLNG W	0	100	0	0	2.00	UT	1,000.00	1,000.00	100	1999	1999	3	20	400	
19	0323	BOAT LFT H	0	100	0	0	1.00	UT	2,500.00	2,500.00	100	1999	1999	3	20	500	
20	0322	BOAT LFT L	0	100	0	0	1.00	UT	1,500.00	1,500.00	100	1999	1999	3	20	300	
21	0317	DCK PLNG W	0	100	0	0	8.00	UT	1,250.00	1,250.00	100	1999	1999	3	20	2,000	
22	0300	BOAT DCK W	0	100	28	12	336.00	SF	44.00	44.00	100	1999	1999	3	28	4,140	

LAND DESCRIPTION

TOTAL OB/XF 17,439

LN	USE CODE	CLS	LAND USE DESCRIPTION	CAP	RD	LOC ZONE	FRONT	DEPTH	TOT LND UTS	UNIT TYPE	DT	DPTH FACT	% COND	TOT ADJ	UNIT PRICE	ADJ UNIT PRICE	LAND VALUE	OTHER ADJUSTMENTS AND NOTES	YEAR	DENSITY	DECL	FRZ	YR	CONSRV

REVIEW DATE 06/13/2018 BY KW Total Acres: 0.00 Total Land Value: 400,000 Market: 0 Agricultural: 0 Common: 400,000 PRINTED 08/02/2023 BY SYS