LOT 2
IN OR 1526/503
(EX FPL ESMT IN OR 875/1817)

JALABAPA INC/
76043 SIDNEY PLACE
YULEE, FL 32097

2023

44-2N-27-1970-0002-0000

BUILDING CHARACTERISTICS

ELEMENT	CD	CONSTRUCTION
Exterior Wall	17	CB STUCCO 100
Roof Structur	04	WOOD TRUSS 100
Roof Cover	03	COMP SHNGL 100
Interior Wall	08	DECORATIVE 100
Interior Floo	14	CARPET 90
Interior Floo	11	CLAY TILE 10
Ceiling	02	F.NOT SUS 100
Air Condition	02	WINDOW 100
Heating Type	03	FORCED AIR 100
Fixtures		190 100
Frame	03	MASONRY 100
Story Height		8 100
RMS		59 100
Units		0 100
Occupancy	00	NONE 100
Quality	03	Quality Level 03
DOR CODE	3900	HOTELS AND MOTELS
MAP NUM		MKT AREA 04
NEIGHBORHOOD/LOC	4001.00	

AREA TYPE	TOTAL GROSS AREA	PCT OF BASE	TOT ADJ AREA	SUBAREA MARKET VALUE
BAS	13,397	100	13,397	1,436,728
BAS	72	100	72	7,721
BAS	77	100	77	8,258
BAS	552	100	552	59,198
BAS	823	100	823	88,260
CAN	40	30	12	1,287
CAN	48	30	14	1,502
CAN	89	30	27	2,895
CAN	170	30	51	5,469
CAN	259	30	78	8,365
TOTALS	31,704		30,460	3,266,607

MARKET ADJUSTMENTS

TYPE	MDL	EFF. AREA	TOT ADJ PTS	EFF. BASE RATE	REPL. COST NEW	AYB	EYB	ECON	FNCT		NORM	% COND
3904	07	30,460	92.0360	135.75	4,134,945	1999	1999	0	0	0	21.00	79.00

1 LMTD HOTEL – 0% - 0 Heated Area: 29862 HX Base Yr

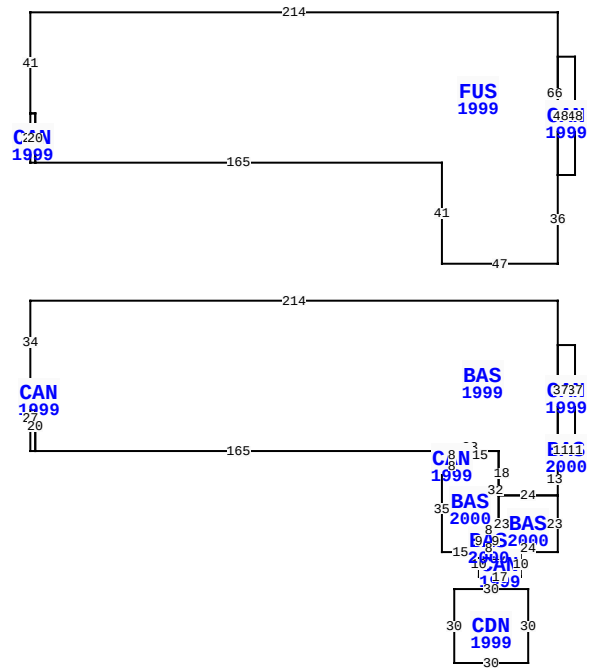

** This building has 13 Sub-Areas

76043 SIDNEY PL, YULEE

BLD DATE	09/02/2020	KK	LGL DATE	
XF DATE	09/02/2020	KK	LAND DATE	09/02/2020 KK
INC DATE			AG DATE	

NASSAU COUNTY PROPERTY

PAGE 1 of 2 4

VALUATION SUMMARY

VALUATION BY	DIRECT_CAP
Tax Group: 4	Tax Dist:
BUILDING MARKET VALUE	4,186,441
TOTAL MARKET OB/XF VALUE	0
TOTAL LAND VALUE - MARKET	0
TOTAL MARKET VALUE	4,812,001
SOH/AGL Deduction	1,738,366
ASSESSED VALUE	3,073,635
TOTAL EXEMPTION VALUE	0
BASE TAXABLE VALUE	3,073,635
TOTAL JUST VALUE	4,812,001
NCON VALUE	0
INCOME VALUE	4,812,001
PREVIOUS YEAR MKT VALUE	2,794,214

PERMIT NUM	DESCRIPTION	AMT	ISSUED
22010222	REROOF	73,719	11/01/2022
Z991275	OTHER	0	09/01/1999
M993631	OTHER	9,000	03/01/1999
E985234	NEW CONSTR	0	09/01/1998
B9805231	TEMP POLE	51,322	08/04/1998
B9805329	NEW CONSTR	0	08/01/1998

SALES DATA

OFF RECORD Number	DATE	TYPE INST	Q U	V I	RSN CD	SALE PRICE
1526/0503	9/20/2007	WD	U	I	02	3,000,000
GRANTOR: PATEL RAMAN						
GRANTEE: JALABAPA INC						
1440/0910	8/29/2006	QC	U	I	07	100
GRANTOR: SAI SHANKAR LLLP						
GRANTEE: PATEL RAMAN						

BUILDING NOTES

BUILDING DIMENSIONS

BAS=[YR=1999] W214 S34 CAN=[YR=1999] S27
E2N20E5N7W7$E7S7W5S20E165 CAN=[YR=1999] S6BAS=[YR=2000]
S35E15 CAN=[YR=1999] S10E17N10W17$BAS=[YR=2000]
E8N9W8S9$N9E8N32W15S6W8$E8N6W8 $E23S18BAS=[YR=2000]
S23E24N23W24$ E24N13BAS=[YR=2000] E7N11W7CAN=[YR=1999]
E7N37W7S37$S11$N66$ PTR=S117 W12 CDN=[YR=1999] W30S30E30N30$
E12 N117$ PTR=N15 FUS=[YR=1999] N36 CAN=[YR=1999]
E7N48W7S48$N66W214S41 CAN=[YR=1999] S20E2N20W2$E2S20E165
S41E47$S15$.

EXTRA FEATURES

LN	OB/XF CODE	DESCRIPTION	BLD	CAP	L	W	UNITS	UT	Adj R	ADJ UNIT PRICE	ORIG COND	YEAR ON	YEAR ACTUAL	Q	% COND	OB/XF MKT VALUE	NOTES
1	0966	FIRE SPRNK	0	0	0	0	29,862.00	SF	3.00	3.00	100	1999	1999	3	79	70,773	
3	0402	CONC BUMPE	0	0	0	0	27.00	UT	25.00	25.00	100	1999	1999	3	84	567	
4	0410	ELEVATOR	0	0	0	0	1.00	UT	25,000.00	25,000.00	100	1999	1999	3	100	25,000	
5	0972	ST LGHT UN	0	0	0	0	5.00	UT	2,530.00	2,530.00	100	1999	1999	3	52	6,578	
6	0975	ST LT/ARM	0	0	0	0	2.00	UT	500.00	500.00	100	1999	1999	3	52	520	
8	2027	FLR SAFE	0	0	0	0	1.00	UT	750.00	750.00	100	1999	1999	3	94	705	
9	0861	POOL GUNIT	0	0	0	0	576.00	SF	85.00	85.00	100	1999	1999	3	25	12,240	
10	0461	IRON FENCE	0	0	132	5	274.00	SF	8.50	8.50	100	1999	1999	3	84	1,956	
11	0845	KOOL DECK	0	0	0	0	1,080.00	SF	7.25	7.25	100	1999	1999	3	79	6,186	
12	0400	CONC CURB	0	0	0	0	92.00	LF	15.00	15.00	100	1999	1999	3	84	1,159	

LAND DESCRIPTION

TOTAL OB/XF 125,684

LN	USE CODE	CLS	LAND USE DESCRIPTION	CAP	RD	LOC ZONE	FRONT	DEPTH	TOT LND UTS	UNIT TYPE	DT	DPTH FACT	% COND	TOT ADJ	UNIT PRICE	ADJ UNIT PRICE	LAND VALUE	OTHER ADJUSTMENTS AND NOTES	YEAR	DENSITY	DECL	FRZ	YR	CONSRV
1	003900	C	MOTEL	0	0003		0.00	0.00	73,387.00	SF		1.00	1.00	1.00	8.00	8.00	587,096							

REVIEW DATE 09/02/2020 BY KK Total Acres: 0.00 Total Land Value: 625,560 Market: 0 Agricultural: 0 Common: 0 PRINTED 08/02/2023 BY SYS

LOT 2
IN OR 1526/503
(EX FPL ESMT IN OR 875/1817)

JALABAPA INC/
76043 SIDNEY PLACE
YULEE, FL 32097

2023

44-2N-27-1970-0002-0000

NASSAU COUNTY PROPERTY

BUILDING CHARACTERISTICS

ELEMENT	CD	CONSTRUCTION

DOR CODE	3900	HOTELS AND MOTELS	
MAP NUM		MKT AREA	04
NEIGHBORHOOD/LOC	4001.00		

AREA TYPE	TOTAL GROSS AREA	PCT OF BASE	TOT ADJ AREA	SUBAREA MARKET VALUE
TOTALS				

MARKET ADJUSTMENTS

TYPE	MDL	EFF. AREA	TOT ADJ PTS	EFF. BASE RATE	REPL. COST NEW	AYB	EYB	ECON	FNCT		NORM	% COND

VALUATION SUMMARY

VALUATION BY	DIRECT_CAP
Tax Group: 4	Tax Dist:
BUILDING MARKET VALUE	4,186,441
TOTAL MARKET OB/XF VALUE	0
TOTAL LAND VALUE - MARKET	0
TOTAL MARKET VALUE	4,812,001
SOH/AGL Deduction	1,738,366
ASSESSED VALUE	3,073,635
TOTAL EXEMPTION VALUE	0
BASE TAXABLE VALUE	3,073,635
TOTAL JUST VALUE	4,812,001
NCON VALUE	0
INCOME VALUE	4,812,001
PREVIOUS YEAR MKT VALUE	2,794,214

PERMIT NUM	DESCRIPTION	AMT	ISSUED

SALES DATA

OFF RECORD Number	DATE	TYPE INST	Q / U	V / I	RSN CD	SALE PRICE
1526/0503	9/20/2007	WD	U	I	02	3,000,000
GRANTOR: PATEL RAMAN						
GRANTEE: JALABAPA INC						
1440/0910	8/29/2006	QC	U	I	07	100
GRANTOR: SAI SHANKAR LLLP						
GRANTEE: PATEL RAMAN						

BLD DATE	09/02/2020	KK	LGL DATE	
XF DATE	09/02/2020	KK	LAND DATE	09/02/2020 KK
INC DATE			AG DATE	

BUILDING NOTES

EXTRA FEATURES

LN	OB/XF CODE	DESCRIPTION	BLD	CAP	L	W	UNITS	UT	Adj R	ADJ UNIT PRICE	ORIG COND	YEAR ON	YEAR ACTUAL	Q	% COND	OB/XF MKT VALUE	NOTES
13	1123	CB 8"	0	0	0	0	252.00	SF	6.15	6.15	100	1999	1999	3	79	1,224	
14	0812	CONCRETE C	0	0	0	0	2,228.00	SF	4.00	4.00	100	1999	1999	3	79	7,040	
15	0803	ASPHALT C	0	0	0	0	22,301.00	SF	2.00	2.00	100	1999	1999	3	50	22,301	
16	0505	FLAGPOLE A	0	0	0	0	20.00	LF	50.00	50.00	100	1999	1999	3	20	200	
17	0648	LIGHTS-AV	0	0	0	0	3.00	UT	140.00	140.00	100	1999	1999	3	20	84	
18	0803	ASPHALT C	0	0	0	0	12,480.00	SF	2.00	2.00	100	1999	1999	3	50	12,480	
19	0978	SECURTY LT	0	0	0	0	4.00	UT	450.00	450.00	100	1999	1999	3	52	936	

BUILDING DIMENSIONS

LAND DESCRIPTION

TOTAL OB/XF 44,265

LN	USE CODE	CLS	LAND USE DESCRIPTION	CAP	RD	LOC ZONE	FRONT	DEPTH	TOT LND UTS	UNIT TYPE	DT	DPTH FACT	% COND	TOT ADJ	UNIT PRICE	ADJ UNIT PRICE	LAND VALUE	OTHER ADJUSTMENTS AND NOTES	YEAR	DENSITY	DECL	FRZ	YR	CONSRV

REVIEW DATE 09/02/2020 BY KK Total Acres: 0.00 Total Land Value: 625,560 Market: 0 Agricultural: 0 Common: 0 PRINTED 08/02/2023 BY SYS