LOT 13
EAST NASSAU WILDLIGHT PH 1C-1
OR 2347/1911

LAY GARRETT W & JASMINE E
473 FIREBUSH LN
YULEE, FL 32097

2023

44-2N-27-1003-0013-0000

NASSAU COUNTY PROPERTY

BUILDING CHARACTERISTICS

ELEMENT	CD	CONSTRUCTION
Exterior Wall	31	HARDIE BRD 100
Roof Structur	03	GABLE/HIP 100
Roof Cover	03	COMP SHNGL 100
Interior Wall	05	DRYWALL 100
Interior Floo	11	CLAY TILE 70
Interior Floo	14	CARPET 30
Air Condition	03	CENTRAL 100
Heating Type	04	AIR DUCTED 100
Bedrooms		3 100
Bathrooms		2 100
Frame	02	WOOD FRAME 100
Stories	1.	1. 100
Units		0 100
Occupancy	00	NONE 100
Quality	01	Quality Level 01

DOR CODE 0100 SINGLE FAMILY
MAP NUM | MKT AREA 04
NEIGHBORHOOD/LOC 4086.0100

AREA TYPE	TOTAL GROSS AREA	PCT OF BASE	TOT ADJ AREA	SUBAREA MARKET VALUE
BAS	1,627	100	1,627	201,244
FGR	483	55	266	32,902
FOP	80	30	24	2,969
FOP	120	30	36	4,453
TOTALS	2,310		1,953	241,567

MARKET ADJUSTMENTS

TYPE	MDL	EFF. AREA	TOT ADJ PTS	EFF. BASE RATE	REPL. COST NEW	AYB	EYB	ECON	FNCT		NORM	% COND
0900	01	1,953	104.1642	123.69	241,567	2021	2021	0	0	0	0.00	100.00

1 SNGL FAM – 100% - 2022 Heated Area: 1627 HX Base Yr 2022

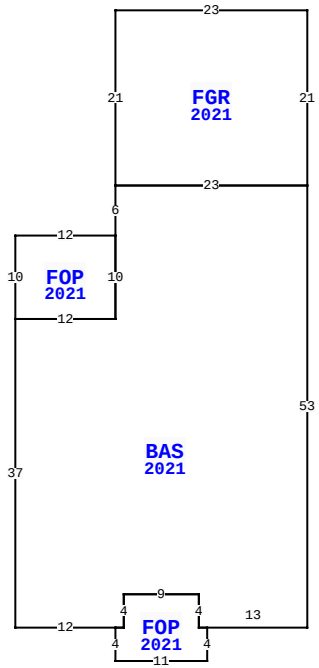

473 FIREBUSH LN, YULEE

BLD DATE	03/21/2023 NW	LGL DATE	
XF DATE		LAND DATE	
INC DATE		AG DATE	

VALUATION SUMMARY

VALUATION BY		STANDARD
Tax Group: 4	Tax Dist:	
BUILDING MARKET VALUE		241,567
TOTAL MARKET OB/XF VALUE		3,650
TOTAL LAND VALUE - MARKET		60,000
TOTAL MARKET VALUE		305,217
SOH/AGL Deduction		32,074
ASSESSED VALUE		273,143
TOTAL EXEMPTION VALUE	HX HB	50,000
BASE TAXABLE VALUE		223,143
TOTAL JUST VALUE		305,217
NCON VALUE		0
INCOME VALUE		
PREVIOUS YEAR MKT VALUE		265,187

PERMIT NUM	DESCRIPTION	AMT	ISSUED
21010368	CO ISSUED	0	08/09/2021
21002251	NEW CONSTR	242,635	03/05/2021

SALES DATA

OFF RECORD Number	DATE	TYPE INST	Q / U	V / I	RSN CD	SALE PRICE
2488/1924	8/17/2021	SW	Q	I	01	280,200
GRANTOR: MATTAMY JACKSONVILLE						
GRANTEE: LAY GARRETT W & JAS						
2371/0963	6/25/2020	SW	Q	V	05	905,000
GRANTOR: WILDLIGHT LLC						
GRANTEE: MATTAMY JACKSONVILL						

BUILDING NOTES

BUILDING DIMENSIONS

FGR=[YR=2021] W23 S21 BAS=[YR=2021] S6 FOP=[YR=2021] W12 S10 E12 N10$ S10 W12 S37 E12 FOP=[YR=2021] S4 E11 N4 W1 N4 W9 S4 W1$ E1 N4 E9 S4 E13 N53 W23$ E23 N21$.

EXTRA FEATURES

LN	OB/XF CODE	DESCRIPTION	BLD	CAP	L	W	UNITS	UT	Adj R	ADJ UNIT PRICE	ORIG COND	YEAR ON	YEAR ACTUAL	Q	% COND	OB/XF MKT VALUE	NOTES
1	0811	CONCRETE B	0	100	0	0	702.00	SF	5.20	5.20	100	2021	2021	3	100	3,650	

LAND DESCRIPTION

TOTAL OB/XF 3,650

LN	USE CODE	CLS	LAND USE DESCRIPTION	CAP	RD	LOC ZONE	FRONT	DEPTH	TOT LND UTS	UNIT TYPE	DT	DPTH FACT	% COND	TOT ADJ	UNIT PRICE	ADJ UNIT PRICE	LAND VALUE	OTHER ADJUSTMENTS AND NOTES	YEAR	DENSITY	DECL	FRZ	YR	CONSRV
1	000100	C	SFR	100			0.00	0.00	1.00	LT		1.00	1.00	1.00	60,000.00	60,000.00	60,000							

REVIEW DATE 07/26/2021 BY NW Total Acres: 0.00 Total Land Value: 60,000 Market: 0 Agricultural: 0 Common: 60,000 PRINTED 08/02/2023 BY SYS