LOT 62
ESMT PT OR 2176/356
EAST NASSAU-WILDLIGHT PHASE 1A

ARMSTRONG MICHAEL S & KAREN
215 MORNING RAY WAY
YULEE, FL 32097

2023

44-2N-27-1000-0062-0000

BUILDING CHARACTERISTICS

ELEMENT	CD	CONSTRUCTION
Exterior Wall	10	ABOVE AVG 100
Roof Structur	03	GABLE/HIP 100
Roof Cover	03	COMP SHNGL 100
Interior Wall	05	DRYWALL 100
Interior Floo	13	LVT/LAMNT 70
Interior Floo	14	CARPET 30
Air Condition	03	CENTRAL 100
Heating Type	04	AIR DUCTED 100
Bedrooms		5 100
Bathrooms		3.5 100
Frame	02	WOOD FRAME 100
Stories	2.	2. 100
Units		0 100
Occupancy	00	NONE 100
Quality	03	Quality Level 03
DOR CODE	0100	SINGLE FAMILY
MAP NUM		MKT AREA 04
NEIGHBORHOOD/LOC	4086.00	

AREA TYPE	TOTAL GROSS AREA	PCT OF BASE	TOT ADJ AREA	SUBAREA MARKET VALUE
BAS	2,441	100	2,441	285,134
FGR	816	55	449	52,448
FOP	85	30	26	3,037
FOP	168	30	50	5,841
FOP	168	30	50	5,841
FSP	283	40	113	13,200
FST	48	55	26	3,037
FUS	563	100	563	65,764
STP	4	10	0	0
STP	5	10	0	0
TOTALS	4,653		3,725	435,118

MARKET ADJUSTMENTS

TYPE	MDL	EFF. AREA	TOT ADJ PTS	EFF. BASE RATE	REPL. COST NEW	AYB	EYB	ECON	FNCT		NORM	% COND
0900	01	3,725	99.3600	117.99	439,513	2019	2019	0	0	0	1.00	99.00

1 SNGL FAM – 100% - 2021 Heated Area: 3004 HX Base Yr 2021

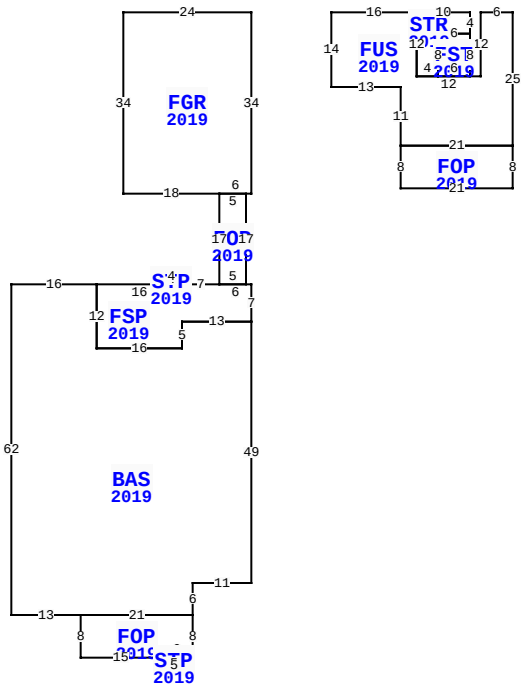

** This building has 11 Sub-Areas

215 MORNING RAY WAY, YULEE

BLD DATE	04/04/2022 NW	LGL DATE	
XF DATE		LAND DATE	
INC DATE		AG DATE	

NASSAU COUNTY PROPERTY

PAGE 1 of 1 4

VALUATION SUMMARY

VALUATION BY		STANDARD
Tax Group: 4	Tax Dist:	
BUILDING MARKET VALUE		435,118
TOTAL MARKET OB/XF VALUE		10,157
TOTAL LAND VALUE - MARKET		60,000
TOTAL MARKET VALUE		505,275
SOH/AGL Deduction		96,247
ASSESSED VALUE		409,028
TOTAL EXEMPTION VALUE	HX HB VX	55,000
BASE TAXABLE VALUE		354,028
TOTAL JUST VALUE		505,275
NCON VALUE		0
INCOME VALUE		
PREVIOUS YEAR MKT VALUE		397,115

PERMIT NUM	DESCRIPTION	AMT	ISSUED
1911863	CO ISSUED	0	11/13/2019
1903614	NEW CONSTR	414,521	05/01/2019

SALES DATA

OFF RECORD Number	DATE	TYPE INST	Q U	V I	RSN CD	SALE PRICE
2342/1019	2/27/2020	WD	Q	I	01	430,000
GRANTOR: D S WARE HOMES LLC						
GRANTEE: ARMSTRONG MICHAEL S						
2203/1180	6/13/2018	QC	U	V	11	100
GRANTOR: RAYDIENT LLC D/B/A RA						
GRANTEE: WILDLIGHT LLC ET AL						

BUILDING NOTES

BUILDING DIMENSIONS

FGR=[YR=2019] W24 S34 E18 FOP=[YR=2019] S17 FSP=[YR=2019] W7 STP=[YR=2019] N1W4S1 E4$ W16 BAS=[YR=2019] W16 S62 E13 FOP=[YR=2019] S8 E15 STP=[YR=2019] S1E5N1 W5$ E6 N8 W21$ E21 N6 E11 N49 W13 S5 W16 N12$ S12 E16 N5 E13 N7 W6$ E5 N17 W5$ E6 N34$ PTR= E15 FUS=[YR=2019] E16 STR=[YR=2019] E10 S4 FST=[YR=2019] S8 W6 N8 E6$ W6 S8 W4 N12$ S12 E12 N12 E6 S25 FOP=[YR=2019] S8 W21 N8 E21$ W21 N11 W13 N14$ W15$.

EXTRA FEATURES

LN	OB/XF CODE	DESCRIPTION	BLD	CAP	L	W	UNITS	UT	Adj R	ADJ UNIT PRICE	ORIG COND	YEAR ON	YEAR ACTUAL	Q	% COND	OB/XF MKT VALUE	NOTES
1	0855	CONC PAVER	0	100	5	4	20.00	SF	10.00	10.00	100	2019	2019	3	99	198	
2	0855	CONC PAVER	0	100	0	0	211.00	SF	10.00	10.00	100	2019	2019	3	99	2,089	
3	0855	CONC PAVER	0	100	0	0	688.00	SF	10.00	10.00	100	2019	2019	3	99	6,811	
4	0855	CONC PAVER	0	100	0	0	107.00	SF	10.00	10.00	100	2019	2019	3	99	1,059	

LAND DESCRIPTION

TOTAL OB/XF 10,157

LN	USE CODE	CLS	LAND USE DESCRIPTION	CAP	RD	LOC ZONE	FRONT	DEPTH	TOT LND UTS	UNIT TYPE	DT	DPTH FACT	% COND	TOT ADJ	UNIT PRICE	ADJ UNIT PRICE	LAND VALUE	OTHER ADJUSTMENTS AND NOTES	YEAR	DENSITY	DECL	FRZ	YR	CONSRV
1	000100	C	SFR	100			0.00	0.00	1.00	LT		1.00	1.00	1.00	60,000.00	60,000.00	60,000							

REVIEW DATE 11/12/2019 BY DJ Total Acres: 0.00 Total Land Value: 60,000 Market: 0 Agricultural: 0 Common: 60,000 PRINTED 08/02/2023 BY SYS